Enjoy the difference

MTOsport

Pilot Operating Handbook

MTOsport 2017 | Rotax 915 IS | Rotax 916 IS

www.auto-gyro.com

AutoGyro Certification Ltd (formally RotorSport UK Ltd)
Poplar Farm
Prolley Moor
Wentnor
Bishops Castle
SY9 5EJ

Company Reg No 5486550

Phone: +44 (0) 1588 505060
Fax: +44 (0) 1588 505060
Email: info@rotorsport.org

Approval number DAI/9917/06

RSUK0423
Pilot's Operating Handbook for Gyroplane MTOSport 2017 with the Rotax 915 iS or 916 iS engine

Flight and Operation Manual for Gyroplane MTOsport2017 915 iS and 916 iS

Model:	MTOsport 2017 915 iS and 916 iS
Serial number:	RSUK/MT02/ _____
Registration:	G- _____
Engine:	915iS or 916 iS serial _____
Propeller:	HTC 1,73m ground adjustable propeller (915iS only) or Woodcomp KW-30
Rotor:	Autogyro 8.4m RotorSystem II TOPP or Autogyro 8.6m RotorSystem II TOPP
Aircraft manufacturer and Type Approval holder:	AutoGyro Certification Ltd (formally RotorSport UK Ltd) Prolley Moor, Wentnor, Bishops Castle, Shropshire, SY9 5EJ
Owner:	_____ _____ _____

This flight manual is always to be carried on board of the aircraft and must be kept in current, up-to-date status. The latest revisions and version status is available at www.rotorsport.org. Extent and revision status of the manual is recorded in the revision log and the table of contents.

This gyroplane may be operated only in strict compliance with the limitations and procedures contained in this manual.

The manual is not a substitute for competent theoretical and practical training on the operation of this aircraft. Failure to adhere to its provisions or to take proper flight instruction can have fatal consequences.

REVISION LOG

Rev.	Change summary	Date	Signature
1.0	First formal release	28.APR.2019	
1.1	Minor amendments highlighted with a bar in the left margin	14.AUG.2019	
2.0	Updated to include the Rotax 916i iS engine	08.JUL.2024	
2.1	Minor amendments prior to first issue	01.AUG.2024	
2.2	Aux Generator 12V supplementary info added. G3X backup battery installation description added. V_{min} updated. Power reduction 915iS supplement 9.18 added. AG-PIL-2024-01 Reference	01.DEC.2024	
2.3	Addition of Cleaning in Saline Environment, Tundra tyres, signature blocks. Removal of NVFR heated pitot requirement	26.MAR.2026	

Pilots Flight and Operation Manual Document approval		
Signature Chris Taylor 2026.09.22 13:00:52 +01'00' Position: CVE Test Pilot	Signature Digitally signed by Gerry Speich Date: 22-Sep-26 Position: Head of Engineering	Signature Digitally signed by A Lyons Date: 2026.09.29 20:54:43 +01'00' Position: Head of Airworthiness

This document is to approve the release of the AutoGyro Pilots Handbook POH_M17_915_2.1 for use with the MTOsport 2017 aircraft fitted with either the Rotax 915 iS or 916 iS engine within the UK market.

Within the UK market AutoGyro Certification Ltd Ltd is considered by the UK CAA to be the Manufacturer and the Type Approval holder.

APPENDIX

LIST OF APPENDICES

Operator Registration Form

This form is supplied to enable the new owner to register the change of ownership, so that he/she may receive any service or other information relating to the aircraft. The information is stored on a computer, and is only used within RotorSport Sales and Service Ltd for the above purpose.

If the new owner does not register, then they will not be automatically updated, which may lead to unsafe flight or an un-airworthy aircraft.

Return this form to:
AutoGyro Certification Ltd (formally RotorSport UK Ltd), Prolley Moor, Wentnor, Bishops Castle, Shropshire, SY9 5EJ
Or email info@rotorsport.org

Aircraft type	Aircraft serial No.
Aircraft Registration No.	Aircraft Engine No.
Logbook Aircraft hours	Logbook Engine hours

Old owners name and address

Signature & date

New owners name and address

Email:

Signature & date

RSS Office use only

Date entered onto database	Acknowledgement sent (date)	Job completed by:

Pilot Operating Handbook
for Gyroplane MTOsport Model 2017 915iS & 916iS

All rights reserved. Under the copyright laws, this manual may not be copied, in whole or in part, without the written consent of AutoGyro GmbH. AutoGyro reserves the right to change or improve its products and to make changes in the content of this manual without obligation to notify any person or organisation of such changes or improvements. Notifications to the Civil Aviation Authorities or other organisations based on legal regulations are unaffected.

MTOsport, Calidus, Cavalon, the AutoGyro logo and word picture mark are trademarks or registered trademarks of AutoGyro AG, registered in Germany and other countries.

Other company and product names mentioned herein may be trademarks of their respective companies. Mention of third-party products is for informational purposes only and constitutes neither an endorsement nor a recommendation. AutoGyro assumes no responsibility with regard to the performance or use of these products. All understandings, agreements, or warranties, if any, take place directly between the vendors and the prospective users.

U.S. and foreign patents of AutoGyro AG are used in the Calidus and Cavalon gyroplanes - (US.Pat.No. 8,690,100; US.Pat.No. D699, 153)

Every effort has been made to ensure that the information in this manual is accurate. AutoGyro GmbH is not responsible for printing or clerical errors.

Pilot Operating Handbook for Gyroplane MTOsport Model 2017 915iS & 916iS

Model: _____

Serial number: _____

Registration: _____

Type certificate number: _____

Aircraft manufacturer and type certificate holder:

AutoGyro GmbH
Dornierstraße 14
D-31137 Hildesheim
Tel.: +49 (0) 51 21 / 8 80 56-00
Fax: +49 (0) 51 21 / 8 80 56-19

Distribution partner: _____

_____

_____

Owner: _____

_____

_____

Where required by the local country approval, this flight manual is always to be carried on board of the aircraft and must be kept in current, up-to-date status. The latest revisions and version status is available at www.auto-gyro.com. Extent and revision status of the manual is recorded in the revision log and the table of contents.

This gyroplane may be operated only in strict compliance with the limitations and procedures contained in this manual.

The manual is not a substitute for competent theoretical and practical training on the operation of this aircraft. Failure to adhere to its provisions or to take proper flight instruction can have fatal consequences.

Applicability

This manual is applicable for MTOsport 2017 915iS & 916iS. For predecessor models, all previously released handbooks remain valid.

REVISION LOG

Rev.	Change summary	Date	Signature
1.1	Includes minor updates and corrections	01.DEC.2020	
2.0	Re-issued with 916iS engine version embodied and Amphibious supplementary info added.	01.APR.2024	
2.1	Minor formatting updates	01.AUG.2024	
2.2	Aux Generator 12V supplementary info added. G3X backup battery installation description added. V_{min} updated. Power reduction 915iS supplement 9.18 added. AG-PIL-2024-01 Reference	01.DEC.2024	
2.3	Addition of Cleaning in Saline Environment, Tundra tyres, signature blocks. Removal of NVFR heated pitot requirement	26.MAR.2026	

The technical content of this document is approved under the authority of the below signatories		
Signature: Kai Reisland 19.Mrz.2026 Position: Certification Manager Date:	Signature: Michael Bartlett Digital unterschrieben von Michael Bartlett Datum: 2026.03.19 10:42:38 +01'00' Position: Certifying Test Pilot Date:	Signature: Digitally signed by Gerry Speich Date: 19.03.2026 Position: Head of Airworthiness Date:

CONTENTS

SECTION 1 - GENERAL 1-1
1.1 Introduction 1-1
1.2 Certification 1-1
1.3 Performance Data and Operating Procedures 1-1
1.4 Definition of Terms 1-2
1.5 Important Note 1-2
1.6 Three-view of the MTOsport Model 2017 915iS & 916iS 1-3
1.7 Description 1-4
1.8 Technical Data 1-4
1.9 Rotor 1-4
1.10 Engine 1-5
1.11 Propeller 1-5
1.12 Special Options 1-6
1.13 Unit Conversion 1-6
1.14 Abbreviations and Terminology 1-7
SECTION 2 - LIMITATIONS 2-1
2.1 General 2-1
2.2 Environmental Limitations 2-2
2.3 Colour Code for Instrument Markings 2-3
2.4 Airspeed Limitations and Instrument Markings 2-4
2.5 Rotor Speed Limitations and Instrument Markings 2-4
2.6 Power Plant Limitations and Instrument Markings 2-5
2.7 Weight and Balance 2-10
2.8 Flight Crew 2-11
2.9 Kinds of Operation 2-11
2.10 Fuel 2-12
2.11 Minimum Equipment 2-14
2.12 Placards 2-15
SECTION 3 - EMERGENCY PROCEDURES 3-1
3.1 Engine Failure 3-1
3.2 Air Restart Procedure 3-2
3.3 Landing into Trees or High Vegetation 3-3
3.4 Degradation of Engine Power 3-3
3.5 Evacuating the Aircraft 3-3
3.6 Engine Fire 3-3
3.7 Off-field Landing 3-4
3.8 Flight Control Malfunction 3-4
3.9 Pitch oscillation recovery 3-5
3.10 Vibration 3-6
3.11 Other Equipment Failure 3-7
3.12 Warning and Caution Lights 3-9

3.13 Parameters out of Limits (where required, refer to the Rotax 915iS and 916iS Operators Manual) 3-13
3.15 Rotor System 3-13
3.16 Rotor Icing 3-14
3.17 Landing with a Deflated Tyre 3-14
3.18 Failure of CSP/VPP Propeller (if installed) 3-14
3.19 Alternative Method of Engine Shut-Down 3-15
SECTION 4 - NORMAL PROCEDURES 4-1
4.1 Airspeeds for Safe Operation 4-1
4.2 Preparation for Flight 4-1
4.3 Daily or Pre-flight Checks 4-1
4.4 Before Boarding 4-5
4.5 Before Starting Engine 4-6
4.6 Starting Engine 4-6
4.7 Taxi and Run-up 4-7
4.8 Take-off Procedure 4-10
4.9 Take-off Run 4-12
4.10 Climb 4-12
4.11 Cruise 4-13
4.12 Descent 4-13
4.13 Approach 4-13
4.14 Landing 4-14
4.15 Go-around 4-14
4.16 After Landing 4-15
4.17 Engine Shut-down 4-15
4.18 Parking 4-16
4.19 Special Procedure: Short Field Take-off 4-16
4.20 Special Procedure: Slow Speed Sink and Recovery 4-17
4.22 Engine In-flight Shut-down and Air Restart 4-17
4.23 Noise Abatement 4-18
SECTION 5 - PERFORMANCE 5-1
5.1 Demonstrated Operating Temperature 5-1
5.2 Airspeed Correction 5-1
5.3 Height-Velocity Diagram 5-2
5.4 Speeds 5-3
5.5 Rate of Climb 5-3
5.6 Take-off and Landing Data 5-4
5.7 Influence on Take-off Distance and Climb Rate 5-5
5.8 Sink Rate and Glide Ratio 5-7
5.9 Additional Performance Data 5-7
5.10 Effect of Rain and Dirt 5-8
5.11 Sound Exposure Level / Noise Characteristics 5-8
5.12 High Altitude Operation 5-8

SECTION 6 - WEIGHT AND BALANCE 6-1
6.1 General 6-1
6.2 Weight and Balance Record 6-1
6.3 Compliance with Weight and Balance 6-1
SECTION 7 - SYSTEM DESCRIPTION 7-1
7.1 Introduction 7-1
7.2 Airframe and Undercarriage 7-1
7.3 Doors, Windows and Exits 7-1
7.4 Fuel System 7-1
7.5 Pneumatic System 7-3
7.6 Power Plant 7-4
7.7 Propeller 7-5
7.8 Rotor System (TOPP) 7-5
7.9 Flight Controls 7-5
7.10 Electrical System 7-8
7.11 Lighting System 7-9
7.12 Electrical circuit protection 7-9
7.13 Avionics 7-10
7.14 Instrument Panel 7-10
7.15 Intercom 7-26
7.16 Pitot Static 7-26
7.17 Indicators and Sensors 7-26
7.18 Seats and Seatbelts 7-26
7.19 Stowage Capacity 7-27
SECTION 8 - HANDLING AND SERVICING 8-1
8.1 Maintenance Obligations 8-1
8.2 General 8-1
8.3 Ground Handling 8-2
8.4 Cleaning 8-2
8.5 Refuelling 8-3
8.6 Checking of Engine Oil Level 8-3
8.7 Checking of Engine Coolant Level 8-4
8.8 Tyres and Pressures 8-4
8.9 Lubrication and Greasing 8-4
8.10 Replenishing of Fluids 8-5
8.11 Engine Air Filter 8-5
8.12 Propeller 8-5
8.13 Battery 8-6
8.14 Winter Operation 8-6
8.15 Removal, Disassembly, Assembly and Installation of the Rotor 8-7
8.16 Road Transport 8-10
8.17 Repairs 8-11
SECTION 9 - SUPPLEMENTS 9-i

9-1 Variable Pitch Propeller – Woodcomp KW-30 1
9-1.1 General 1
9-1.2 Limitations 1
9-1.3 Emergency Procedures 1
9-1.4 Normal Procedures 1
9-1.5 Performance 2
9-1.6 Weight and Balance 2
9-1.7 System Description 2
9-1.8 Handling and Servicing 3
9-2 Lights 1
9-2.1 General 1
9-2.2 Limitations 2
9-2.3 Emergency Procedures 2
9-2.4 Normal Procedures 2
9-2.5 Performance 2
9-2.6 Weight and Balance 2
9-2.7 System Description 2
9-2.8 Handling and Servicing 3
9-3 GPS/Moving Map Systems 1
9-3.1 General 1
9-3.2 through 9-3.6 2
9-3.7 System Description 2
9-3.8 Handling and Servicing 2
9-4 ELT (Emergency Locator Transmitter) i
9-4.1 General i
9-4.2 Limitations i
9-4.3 Emergency Procedures i
9-4.4 Normal Procedures i
9-4.5 through 9-4.6 i
9-4.7 System Description i
9-4.8 Handling and Servicing ii
9-5 Instructor Cockpit iv
9-5.1 General iv
9-5.2 through 9-5.6 iv
9-5.7 System Description iv
9-5.8 Handling and Servicing iv
9-6 Amphibious Floats (Separate Supplement) i
9-6.1 General i
9-7 Aux Generator 12V i
9-7.1 General i
9-8 Power Reduction of the Rotax 915iS Engine i
9-8.1 General i
9-8.2 Limitations i
9-8.3 Emergency Procedures i

9-8.4 Normal Procedures i
9-8.5 Performance i
9-8.6 Weight and Balance i
9-8.7 System Description i
9-8.8 Handling and Servicing i
SECTION 10 - SAFETY TIPS 10-1
APPENDIX 10-1
Operator Registration Form
Incident Reporting Form

LIST OF EFFECTIVE PAGES

Page(s)	Rev.	Date
1-1 to 1-8	2.1	01.AUG.2024
2-1 to 2-14	2.3	26.MAR.2026
3-1 to 3-12	2.1	01.AUG.2024
4-1 to 4-15	2.1	01.AUG.2024
5-1 to 5-7	2.2	01.DEC.2024
6-1 to 6-1	2.1	01.AUG.2024
7-1 to 7-25	2.1	01.AUG.2024
8-1 to 8-11	2.3	26.MAR.2026
9-1 – 1 to 4	2.1	01.AUG.2024

Page(s)	Rev.	Date
9-2 – 1 to 1	2.1	01.AUG.2024
9-3 – 1 to 1	2.1	01.AUG.2024
9-4 – 1 to 2	2.1	01.AUG.2024
9-5 – 1 to 1	2.1	01.AUG.2024
9-6 – 1 to 1	2.1	01.AUG.2024
9-7 – 1 to 1	2.2	01.DEC.2024
9-8 – 1 to 1	2.2	01.DEC.2024
10-1 to 10-4	2.1	01.AUG.2024

INTENTIONALLY LEFT BLANK

CONTENTS

1.1 Introduction 1-1
1.2 Certification 1-1
1.3 Performance Data and Operating Procedures 1-1
1.4 Definition of Terms 1-2
1.5 Important Note 1-2
1.6 Three-view of the MTOsport Model 2017 915iS & 916iS 1-3
1.7 Description 1-4
1.8 Technical Data 1-4
1.9 Rotor 1-4
1.10 Engine 1-5
1.11 Propeller 1-5
1.12 Special Options 1-6
1.13 Unit Conversion 1-6
1.14 Abbreviations and Terminology 1-7

INTENTIONALLY LEFT BLANK

SECTION 1 - GENERAL

1.1 Introduction

This manual is designed as an operating guide for pilots, instructors, and owners/operators, providing information for the safe and efficient operation of this gyroplane. It includes material required to be furnished to the pilot by the competent certification authority. However, this handbook is not designed as a substitute for adequate and competent flight instruction.

Pilots of this aircraft must hold a proper license including the class rating 'gyroplane', corresponding to the aircraft's registration. A special endorsement may be required to fly with passengers. It is the pilot's responsibility to be familiar with this handbook, the special characteristics of this gyroplane, and all other information and legal requirements relevant for the operation in his country. The pilot is responsible to determine the gyroplane is safe for flight, and to operate the aircraft with respect to the procedures and limitations provided in this manual.

It is the owner's/operator's responsibility to have this gyroplane registered and insured, according to country-specific regulations. The aircraft owner/operator is also responsible for maintaining the gyroplane in airworthy condition. Maintenance instructions are provided in the Maintenance Manual and in SECTION 8 of this manual. Note that depending on the kind of operation, type of maintenance activity, or component involved, the competent authority may dictate qualified personnel and/or respective facilities.

1.2 Certification

The MTOsport Model 2017 915iS and 916iS are designed, tested and certified according to the German design specifications for microlight gyroplanes ("Bauvorschriften für Ultraleichte Tragschrauber", BUT 2001) including its latest amendment published in "Nachrichten für Luftfahrer" NfL II 13/09 issued 12.02.2009, as well as the British Civil Airworthiness Requirements (BCAR) Section T.

The corresponding certification documents (Geräte-Kennblatt) have been issued by the responsible Germany department DULV (Deutscher Ultraleichtflugverband e.V.), respectively the German national certifying authority.

The UK CAA issue an Airworthiness Approval Notice (AAN) and Type Approval Data sheet (TADS), available from the UK CAA website.

The noise certificate was granted according to the German requirements for noise protection for microlight gyroplanes ("Lärmschutzverordnung für Ultraleichte Tragschrauber").

1.3 Performance Data and Operating Procedures

The legal basis for operating a gyroplane is provided by national law and its respective regulations. The instructions and conditions contained have to be considered when operating the gyroplane. In addition the gyroplane must be operated in compliance with the technical specifications and limitations from the national approval (e.g. Type Approval Data Sheet).

All documented performance data and operating procedures have been identified within the certification processes for this gyroplane by means of flight test and analysis.

1.4 Definition of Terms

This manual uses **WARNING**s, **CAUTION**s and **NOTE**s in bold capital letters to indicate especially critical and important instructions. Additionally, the colour of the panel (red, yellow, and grey shading) highlights the significance of the instruction. Definitions for each term are given below.

WARNING

A warning means that the neglect of the appropriate procedure or condition could result in personal injury or loss of life.

CAUTION

A caution means that the neglect of the appropriate procedure or condition could result in damage to or destruction of equipment.

NOTE

A note stresses the attention for a special circumstance, which is essential to emphasize.

1.5 Important Note

Before each flight pilots must make themselves familiar with the appropriate navigational, weather and safety information pertinent to their planned route.

The limitations provided in SECTION 2 of this manual must be respected at all times. Check the manufacturer's web site www.auto-gyro.com regularly for flight manual updates, airworthiness directives, service bulletins, or safety information.

Abrupt manoeuvres or flight in heavy turbulence must be avoided as this could lead to rotor speed variations associated with high stress, possible damage to the aircraft, or uncontrollable attitudes.

1.6 Three-view of the MTOsport Model 2017 915iS & 916iS

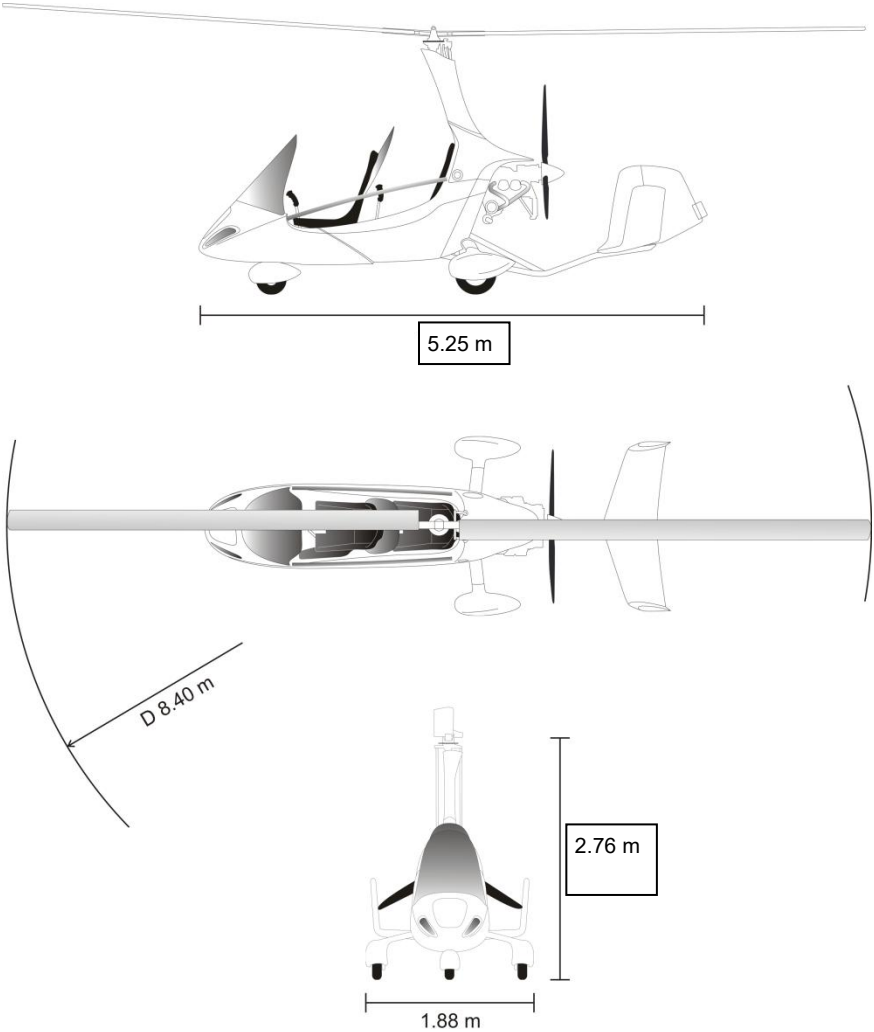

1.7 Description

General Characteristics

- Gyroplane with nose gear wheel chassis
- Framework manufactured from inert-gas welded stainless steel tube
- Two-seat tandem configuration
- Main landing gear with GRP (glass fibre reinforced plastic) spring spar and hydraulic disc brakes
- Extruded aluminium rotor
- Rotor head controlled with connecting rods
- Rudder controlled with cables and push-pull cables
- Rudder and stabilizer surfaces made of carbon fibre

1.8 Technical Data

Length: ..... 5.25 m
Width: ..... 1.88 m
Height: ..... 2.76 m
Empty weight:.....295 kg
Useful load: .....265 kg
Take-off weight/mass (max.):.....560 kg

NOTE

AutoGyro may permit a higher MTOM in special operational cases. Because this affects safe life limits, these are managed by separate documents

Fuel tank capacity: ..... 94 ltr

1.9 Rotor

General

Type: .....TOPP 2-bladed, fixed pitch, free to teeter
Material: .....EN AW 6005A T6 aluminium extrusion
Blade profile: .....NACA 8H12

Standard Rotor RSII 8.6m TOPP (grey end cap)

Rotor diameter ..... 8.6 m
Rotor disc area.....58.1 sqm
Rotor disc load (at 450.0 kg / 500.0 kg) ..... 8.1 kg/sqm / 9.0 kg/sqm
Rotor disc load (at 560kg MTOW) .....10.1 kg/sqm

Alternative Rotor RSII 8.4m TOPP (blue end cap)

Rotor diameter ..... 8.4 m
Rotor disc area.....55.4 sqm
Rotor disc load (at 450.0 kg / 500.0 kg) ..... 8.1 kg/sqm / 9.0 kg/sqm
Rotor disc load (at 560kg MTOW) .....10.1 kg/sqm

WARNING

Rotor System Assemblies and the Rotor System Bearing have a defined 'Safe Life' of 2,500hrs and 1500hrs respectively.

These parts must be replaced when this life has been achieved, regardless of condition.

1.10 Engine

ROTAX 915iS & 916iS

- 4-cylinder, four-stroke spark-ignition engine with opposed cylinders with turbo charger
- Liquid cooled cylinder heads
- Air cooled cylinders
- Dry sump forced lubrication with separate oil tank
- Automatic adjustment by hydraulic valve tappet
- Fuel injected
- 2 electric fuel pumps
- Electronic dual ignition
- Propeller drive via reduction unit with integrated mechanical shock absorber and overload clutch
- Electric starter (12V 0.6kW)
- Air intake system, exhaust system

1.11 Propeller

HTC 4 Blade (915iS)

Airscrew with ground adjustable pitch made of CRP / GRP
Model ..... HTC 4 Blade 172 ccw 3B
Number of blades 4
Diameter ..... 172 cm
In-flight pitch adjustment ..... none

Woodcomp KW-30 hydraulic inflight adjustable Prop (915iS & 916iS)

Airscrew with in-flight adjustable pitch made of CRP / wood
Model KW-30
Number of blades 3
Diameter ..... 172 cm
In-flight pitch adjustment ..... Hydraulic, constant speed manual or automatic.
Manual control is via the aviation standard 'blue' panel mounted adjustment knob
The Automatic control system automatically maintains the most effective engine rpm and propeller pitch to give best performance, and requires no pilot input.

1.12 Special Options

POH Supplement Section 9.6 Amphibious floats fitment and operation

Where approved in the country of operation, this aircraft may be optionally equipped with PuddleJumper floats. The separate supplement provides the operation handbook.

1.13 Unit Conversion

Multiply	by	to obtain
kts (knots)	1.852	km/h
km/h (kilometres per hour)	0.54	kts
mph (miles per hour)	1.61	km/h
km/h (kilometres per hour)	0.62	mph
ft (feet)	0.305	m
m (metres)	3.28	ft

1.14 Abbreviations and Terminology

ACL	Anti-Collision Light
AGL	Above Ground Level
ATC	Air Traffic Control
BCAR	British Civil Airworthiness Requirements
BUT	Bauvorschriften für Ultraleichte Tragschrauber – German design specification for microlight gyroplanes
CAS	Calibrated AirSpeed – indicated speed corrected for installation errors
ccw	Counter Clock Wise
CG	Centre of Gravity
CT	Coolant Temperature
CRP	Carbon Reinforced Plastic
CSP	Constant Speed Propeller
CT	Coolant Temperature
DA	Density Altitude
DOM	Date of Manufacture
DULV	Deutscher UltraLeichtflugVerband e.V.
Empty Wt	Empty Weight of the gyroplane including oil, cooling liquid and unusable fuel
FPS	Feet Per Second
ft	foot
G / g	G-loading as a factor of gravity
gal	gallon
Gal/hr	Gallons per hour
GEN	Generator
GPS	Global Positioning System
GRP	Glass Reinforced Plastic
HP	horsepower
hrs	hours
H/V	Height-Velocity
IAS	Indicated AirSpeed – airspeed values in this manual refer to indicated air speed
ICAO	International Civil Aviation Organization
In Hg	(Manifold) Pressure, corresponding to inch mercury
ISA	International Standard Atmosphere
JNP	JahresNachPrüfung – Annual Inspection
KIAS	Knots Indicated Air Speed
Kg	Kilogram
Km/h	Kilometres per hour
Kt	Knot
kW	Kilowatt

Lbs	Pounds (weight)
LED	Light Emitting Diode
LH	Left-Hand
LOEP	List Of Effective Pages
ltr	Litre
Ltr/hr	Litres per Hour
m	metres
MAP	Manifold Absolute Pressure
max	maximum
MCP	Maximum Continuous Power
min	minimum
m/s	Metres per second
MTOM	Maximum Take-Off Mass
MTOW	Maximum Take-Off Weight
OAT	Outside Air Temperature
PA	Pressure Altitude
PFD	Primary Flight Display
PIO	Pilot Induced Oscillation
POH	Pilot Operating Handbook
RH	Right-Hand
RFM	Rotorcraft Flight Manual
RON	Research Octane Number
RPM	Revolutions Per Minute
Sec	Second
sqm	Square metres
TAS	True AirSpeed – calibrated airspeed corrected for air density
TCU	Turbo Control Unit (engine)
TOC	Table Of Contents
TOP	Take-Off Power
V_A	Design manoeuvring speed
V_B	Design speed for maximum gust intensity
VFR	Visual Flight Rules
V_H	Maximum level-flight speed at maximum continuous power
V_{Hmin}	Minimum level-flight speed
V_{NE}	Never-Exceed Speed – maximum speed that must never be exceeded
VOX	Voice Operated eXchange, means: voice activation (level)
VPP	Variable Pitch Propeller
VSI	Vertical Speed Indicator
V_X	Speed for best angle of climb
V_Y	Speed for best rate of climb and maximum endurance

W&B	Weight and Balance
yrs	years

INTENTIONALLY LEFT BLANK

CONTENTS

2.1 General 2-1
2.2 Environmental Limitations 2-2
2.3 Colour Code for Instrument Markings 2-3
2.4 Airspeed Limitations and Instrument Markings 2-4
2.5 Rotor Speed Limitations and Instrument Markings 2-4
2.6 Power Plant Limitations and Instrument Markings 2-5
2.7 Weight and Balance 2-10
2.7.1 Weight Limits 2-10
2.7.2 Centre of Gravity (CG) Limits 2-10
2.7.3 Demonstrated Structural Load Factors 2-11
2.8 Flight Crew 2-11
2.9 Kinds of Operation 2-11
2.10 Fuel 2-12
2.10.1 Approved Fuel Grades 2-12
2.10.2 Operation with leaded AVGAS fuels 2-13
2.10.3 Fuel Tank Capacities 2-13
2.10.4 Unusable Fuel 2-13
2.10.5 Fuel Level Indication 2-13
2.11 Minimum Equipment 2-14
2.11.1 Minimum Equipment Day VFR 2-14
2.11.2 Minimum Equipment Night VFR 2-14
2.12 Placards 2-15

INTENTIONALLY LEFT BLANK

SECTION 2 - LIMITATIONS

This section contains operating limitations, instrument markings and basic placards which are required for safe operation of the gyroplane, including its engine, and standard equipment or systems.

2.1 General

WARNING

The operation of a gyroplane demands professional pilot instruction and dedicated training on gyroplanes. The aircraft must only be flown by a properly qualified and licensed pilot.

WARNING

Positive G load on the rotor must be maintained during all flight manoeuvres. Do not perform any manoeuvres resulting in the sensation of feeling light or near weightless.

WARNING

Smoking on board is prohibited!

CAUTION

This gyroplane has been designed and tested for a safe design load of 3.0g at maximum take-off weight 560kg. Note that flying at high speeds in turbulent air, especially in combination with aggressive manoeuvres or a steep turn, can easily create high loads on the aircraft.

NOTE

The certification of this aircraft may limit operations to a specific nation. If the aircraft is to be flown on an international basis, it is the pilot/operators responsibility to ensure that international flight is undertaken in accordance with the laws of applicable national airspace.

NOTE

Whilst this aircraft has been proven compliant to multiple national stringent loading requirements, it may be exposed to unpredictable and high loads in service especially when operated on rough surfaces, such as unprepared grass strips. In these cases it is essential to perform a thorough pre-flight inspection and have components and parts replaced, where needed.

NOTE

The selection and use of this particular aircraft is at the sole discretion and responsibility of the pilot/operator. The pilot/operator is reminded that the aircraft use may be restricted by the terms of the aircraft Type Certificate or Type Approval operational limitations. AutoGyro Certification Ltd and AutoGyro GmbH take no responsibility for your decision to fly.

Because, at the time of writing, no internationally agreed standards exist for gyroplanes, this aircraft has not been certified to that level. Whilst the manufacturer takes great care to ensure the parts are of appropriate quality, the component and system reliability level may be less than that with a Standard Category Type Certified aircraft, and pilot operators must consider this in their flight planning.

In common with other aircraft of this type the MTOsport 2017 utilises a non-certified engine. This means that there may be a higher risk of engine failure than in a certified aircraft, with the associated risks of damage or injury as the result of an unplanned landing. Therefore strict compliance with the engine manufacturer's maintenance schedules, operational procedures and any additional instructions which may be given to you by AutoGyro GmbH, on behalf of the engine supplier, is essential. The aircraft must always be flown with the risk of engine failure in mind, and appropriate precautions taken.

2.2 Environmental Limitations

Maximum wind speed or gust intensity ..... 40 Kts
Maximum demonstrated crosswind component for take-off and landing ... 22 Kts
Maximum tailwind component for take-off and landing ..... 5 Kts
Maximum demonstrated operating altitude ..... 12 000 ft
Temperature..... -20 to +40 °C

WARNING

Do not consider flying in the likelihood of severe weather. Thunderstorms may develop rapidly with the risk of heavy precipitation or hail, severe turbulence with strong vertical air movements, and lightning strike. If, despite proper flight planning, a thunderstorm should be encountered, consider a precautionary landing to avoid the squall line. A lightning strike may damage the main rotor bearing. Thorough inspection and maintenance after lightning strike must be performed.

CAUTION

Care must be used operating at high altitudes, as it is possible to overspeed the engine in level flight at max power. Take care to monitor the engine rpm gauge.

Aircraft and engine performance degrades with decreasing pressure altitude and increasing temperatures. Care must be taken to maintain safe flight when nearing operational temperature extremes.

2.3 Colour Code for Instrument Markings

Red	Operating limits. Pointer shall not enter red during normal operation
Yellow	Precautionary or special operating procedure range
Green	Normal operating range

2.4 Airspeed Limitations and Instrument Markings

Air Speed	Marking	
V_{NE} Never Exceed Speed	Red radial	**195 km/h** **120 mph** **105 KIAS**
VB (Max design speed for strong gusty conditions)	Yellow arc	120 – 195 km/h 75 – 120 mph 65 – 105 KIAS
Recommended manoeuvring speed range	Green arc	**>40 – 120 km/h** **>30 – 75 mph** **>25 - 65 KIAS**
V_{MIN} Minimum Speed	Yellow arc	0 – >40 km/h 0 – >30 mph 0 – >25 KIAS

WARNING

The maximum speed V_{NE} must never be exceeded!

WARNING

Depending on installed optional equipment V_{NE} may be lower! Supplemental information in SECTION 9 must be respected!

WARNING

Sudden or large forward control inputs must be avoided at all times in flight.

2.5 Rotor Speed Limitations and Instrument Markings

Rotor Speed	Marking	
Rotor speed limit	Red radial	**610 RPM**
Rotor speed caution range	Yellow arc	550 – 610 RPM
Normal range	Green arc	200 – 550 RPM
Maximum pre-rotation speed	Yellow radial	**320 RPM**

2.6 Power Plant Limitations and Instrument Markings

Engine Speed	Marking	
Maximum engine speed	Red radial	**5800 RPM**
5 minute take-off power regime	Yellow arc	5500 – 5800 RPM
Maximum continuous power	Green arc	**1400 - 5500 RPM**
Recommended pre-rotation clutch speed	Green radial	**2000 RPM**
	Yellow arc	0 – 1400 RPM

There is a marked point at 2,500rpm. This indicates the LANE A and LANE B check rpm.

915iS engine oil temperature limits

Engine Oil Temperature 915iS	Marking	
Maximum oil temperature	Red radial	**130 °C**
	Yellow arc	110 – 130 °C
Normal range	Green arc	90 – 110 °C
	Yellow arc	50 – 90 °C
Minimum oil temperature	Red radial	**50 °C**

916iS engine oil temperature limits

Engine Oil Temperature 916iS	Marking	
Maximum oil temperature	Red radial	**120 °C**
	Yellow arc	110 – 120 °C
Normal range	Green arc	90 – 110 °C
	Yellow arc	50 – 90 °C
Minimum oil temperature	Red radial	**50 °C**

Oil temp notes from Rotax Operators Manual

Parameter	Min	Max
Engine Start	-20 °C (-4 °F)	-
Take-off	50 °C (122 °F)	-
Normal operation	50 °C (122 °F)	130 °C (266 °F) 915iS 120 °C (248 °F) 916iS

Coolant Temperature (CT)	Marking	
Maximum engine coolant temperature	Red radial	**120 °C**
Normal range	Green arc	50 – 120 C

Coolant temp notes from Rotax OM

Parameter	Min	Max
Coolant temperature at ground idle, start procedure and warm up	-20 °C (-4 °F)	-
Coolant temperature at normal operation	50 °C (122 °F) is taken as the manufacturer's minimum.	120 °C (248 °F)

Engine Oil Pressure	Marking	
Maximum oil pressure	Red radial	**7 bar**
	Yellow arc	5 –7 bar
Normal range	Green arc	2 –5 bar
	Yellow arc	0.8 –2 bar
Minimum oil pressure	Red radial	**0.8 bar**

Oil pressure notes from Rotax OM

Parameter	Min	Max
Oil pressure at engine speed <3500rpm	0.8 bar / 11.6 psi	5 bar / 72.5 psi (max. 7 bar /101.5 psi allowed only for a short period at cold start)
Oil pressure at engine speed >3500rpm	2.0 bar / 29 psi	5 bar / 72.5 psi (max. 7 bar /101.5 psi allowed only for a short period at cold start)

NOTE

Operating the engine below 90 to 110 °C (194 to 230 °F) may lead to formation of condensation water in the lubrication system. To evaporate possibly accumulated condensation water, the oil temp should reach 100 °C (212 °F) oil temperature on each day of operation.

NOTE

Depending on the instrumentation fitted in the aircraft it is possible to display more engine parameter information (obtained from the engine CAN-Bus system) than identified within this section. These devices also allow more flexibility in the information display. The parameter listing for a G3X display is shown below.

915iS

			G3X	
No.	Parameter Name	Range	limits min	limits max
1	Engine RPM	0 to 7000 1/min	0	1800
				2000
			1800	5500
			5500	5800
			5800	7000
2	Manifold Air Pressure	0 to 59in	0	0,8
			0,8	50
			50	51
			51	59
3	Oil Pressure	0 to 8 bar	0	0,8
			0,8	2
			2	5
			5	7
			7	8
4	Oil Temperature	30 to 150°C	30	50
			50	110
			110	130
			130	150
5	Fuel Pressure	2300 to 3700 hPa	2300	2500
			2500	2700
			2700	3200
			3200	3500
			3500	3700
6	Fuel Flow	0 to 55 l/h	0	45
			45	50
			50	55
7	Manifold Temperature	-30 to 60°C	-30	-20
			-20	50
			50	60
8	Coolant Temperature	38 to 150°C	38	50
			50	110
			110	120
			120	150
9	EGT	0 to 1100°C	0	900
			900	950
			950	1100
10 + 11	ECU Supply Bus Voltage Lane	8 to 16V	8	10
			10	12
			12	14,4
			14,4	16
12	Rotor RPM	0 to 700 1/min	0	200
				320
			200	550
			550	610
			610	700
13	Fuel Quantity	0 to 90 or 0 to 100	0	8
			8	19
			19	100
14	Battery Amps	-10 to 40A	-10	-7
			-7	-3
			-3	20
			20	35
			35	40

916iS

No.	Parameter Name	Range	limits min	limits max
1	Engine RPM	0 to 7000 1/min		
			0	1800
				2000
			1800	5500
			5500	5800
			5800	7000
2	Manifold Air Pressure	0 to 59in	0	0.8
			0,8	50
			50	53.2
			53.2	59
3	Oil Pressure	0 to 8 bar	0	0.8
			0.8	2
			2	5
			5	7
			7	8
4	Oil Temperature	30 to 150°C	30	50
			50	110
			110	120
			120	150
5	Fuel Pressure	2.5 to 3.7 bar	2.3	2.5
			2.5	2.9
			2.9	3.2
			3.2	3.5
			3.5	3.7
6	Fuel Flow	0 to 70 l/h	0	55
			55	60
			60	70
7	Manifold Temperature	-30 to 100°C	-30	-20
			-20	50
			50	80
			80	100
8	Coolant Temperature	38 to 150°C	38	50
			50	110
			110	120
			120	150
9	EGT	0 to 1100°C	0	950
			950	1100
10 + 11	ECU Supply Bus Voltage Lane A und B	8 to 16V	8	10
			10	12
			12	14,4
			14,4	16
12	Rotor RPM	0 to 700 1/min	0	200
				320
			200	550
			550	610
			610	700
13	Fuel Quantity	0 to 90 or 0 to 100	0	8
			8	19
			19	100
14	Battery Amps	-10 to 40A	-10	-7
			-7	-3
			-3	20
			20	35
			35	40

2.7 Weight and Balance

2.7.1 Weight Limits

Maximum take-off mass (MTOM): ..... 560 kg*

*see applicable country Type Approval or Type Certificate Data Sheet

CAUTION

The take-off weight is the total weight of the gyroplane including empty weight, optional/additional equipment, occupants, fuel, and luggage at take-off. The maximum value specified above must never be exceeded.

Maximum weight in front seat: 110kg
Minimum weight in front seat: 60kg
Maximum weight in aft seat: .....110 kg

NOTE

Pilots in the front seat weighing less than 60 kg must carry corresponding ballast.

Storage compartment in nose section

Maximum weight in storage compartment .....10 kg

NOTE

Because of the moment arm effect, any load in the nose locker storage compartment reduces the aircraft available seat loading. The moment arm ratio for the nose locker to front seat is 1:2, and for the nose locker to rear seat 1:4.

Example: With the storage compartment loaded to the limit of 10 kg the maximum allowed weight in the front seat is reduced by 2 x 10Kg to 90 kg or the rear seat by 4 x 10Kg to 70Kg. This example loading can also be spread between both seats, such that the front seat load is reduced by 5Kg x 2 = 10Kg, and the rear seat load reduced by 5Kg x 4 = 20Kg.

2.7.2 Centre of Gravity (CG) Limits

The centre of gravity is considered to be within limits if all weight limits above are respected. For details see SECTION 6 of this manual.

2.7.3 Demonstrated Structural Load Factors

Demonstrated positive load factor (560 kg) ..... + 3.0 g
Demonstrated negative load factor (560 kg) – structural limit..... - 1.0 g

Important note: the indication of a demonstrated negative load factor represents a structural limit only. In flight, the limitations (see 2.9) have to be respected at all times.

2.8 Flight Crew

Minimum crew is one pilot in the front seat.

Harness in aft seat must be fastened and tight.

CAUTION

The aft control stick should be removed unless the passenger seat is occupied by a qualified flight instructor.

2.9 Kinds of Operation

Day-VFR operation is approved for all MTOsport 2017 gyroplanes

In markets where night operation is permitted, night-VFR operation is approved for MTOsport 2017 gyroplanes when fitted with the required minimum equipment.

Aerobatic flight is prohibited!

NOTE

Manoeuvres involving bank angles of more than 60° are considered to be aerobatic flight.

Low-G manoeuvres are prohibited!

WARNING

Any manoeuver resulting in a low-G (near weightless) condition can result in a catastrophic loss of lateral/roll control in conjunction with rapid main rotor RPM decrease. Always maintain adequate load on the rotor and avoid aggressive pitch forward control input performed from level flight or following a pull-up.

Excessive side-slip is prohibited!

WARNING

Side slip may be performed only with proper training and within safe boundaries. Use gentle pedal input for initiation and stabilization. Do not rely on airspeed indication in side slip. Never perform abrupt control stick input into the direction of motion. Be aware that excessive side slip particularly in strong/gusty conditions may result in an uncontrollable and unrecoverable attitude.

Flight in icing conditions is prohibited!

NOTE

Icing may occur even at temperatures above freezing!

Operation in strong gusts or wind speeds of more than 72 km/h (40 kts) is prohibited!

2.10 Fuel

2.10.1 Approved Fuel Grades

Refer also to Rotax Service Instruction

Preferred fuel

AVGAS UL91 (ASTM D7547)
EN 228 Super or EN228 Super plus (min. RON 95)

Alternate fuel

AVGAS 100 LL (ASTM D910)

NOTE

If none of the mentioned fuels is available, consult the corresponding European Standard EN228 as a reference. The fuel needs to be assessed at least in the octane number and the maximum ethanol content equal or better.

NOTE

AVGAS 100 LL places greater stress on the valves seats due to its high lead content and forms increased deposits in the combustion chamber and lead sediments in the oil system.

NOTE

When refuelling, attach the earth line to the exhaust pipe to prevent static electrical discharges!

NOTE

AutoGyro does not recommend E10 for permanent or sustained use. Do not let E10 remain in the fuel system for an unnecessarily long time or for long-term storage!

For operational constraints and maintenance aspects when using preferred fuel and alternate fuel, refer to the engine manufacturer's manual.

2.10.2 Operation with leaded AVGAS fuels

If the engine is operated more than 30 % of engine operating time with leaded AVGAS fuels, the following maintenance operations are necessary in addition by latest after every 50 operating hours:

- change of oil filter,
- change of engine oil,
- oil level check, etc.,

According to the most recent engine manufacturer´s maintenance manual

NOTE

When operating primarily on leaded AVGAS fuel, it is recommended to make a change of engine oil every 25 operating hours.

2.10.3 Fuel Tank Capacities

Maximum tank capacity..... 94 ltr

2.10.4 Unusable Fuel

Unusable fuel quantity..... 1.2 ltr

2.10.5 Fuel Level Indication

The rear tank fuel level sight gauge, and the instrument panel fuel level gauge, read accurately when on level ground or in the air in level flight at 100 km/h / 60 mph / 55 KIAS. Increasing airspeed results in a more nose down attitude and less accurate (lower) fuel level indication. Similarly a nose up attitude will give a less accurate (higher) fuel level indication.

2.11 Minimum Equipment

2.11.1 Minimum Equipment Day VFR

The following equipment must be operative for flight under day VFR conditions:

- Air speed indicator
- Altimeter
- Magnetic compass
- Side slip indicator
- Rotor RPM indicator
- Outside air temperature (OAT)
- Engine instruments (oil pressure, oil temperature, RPM, coolant temperature/ECT)
- Pre-rotator

2.11.2 Minimum Equipment Night VFR

The following additional equipment must be operative for flight under Night-VFR under UK rules.

- Instrument and panel lighting
- Aveo Galactica Position/navigation/strobe lights fitted
- Nose-mounted taxi lights
- Underbody-mounted landing light
- Heated pitot-tube and associated LED indicator
- Gyroscopic bank and pitch indicator (Aspen EFD1000 PFD or VFR)
- Gyroscopic direction indicator (Aspen EFD1000 PFD or VFR)
- Vertical speed indicator
- Secondary pressure altitude indicator (Aspen EFD1000 PFD)
- Clock (pilot carry on)
- Low voltage warning system
- First-aid kit (pilot carry-on)
- Electric torch for each crew member

The Aspen PFD has been replaced in newer MTO Sport 2017s by a Garmin G3x or Garmin G5. Regardless of which devices are used, there must be an independent pair of devices to provide the pilot with back-up indications of airspeed and altitude. For instance, barometric airspeed and altimeter paired to a certified Garmin G5 with backup battery

A gyro compass must be displayed.

An artificial horizon must be displayed.

A vertical speed indication must be displayed.

If two electronic devices are fitted, there indications must be independent and not reliant on a shared device. A Garmin G5, if used primary display, must be the certified version with backup battery.

NOTE

It is the pilot/operators responsibility to ensure the aircraft is properly equipped for night flight in compliance with the rules of the country of operation!

2.12 Placards

In clear view of the pilot:

OPERATION LIMITATIONS

Aerobatic manoeuvres are prohibited.

Manoeuvres involving a deliberate reduction in normal G shall be avoided.

VFR only

No smoking

„**Day VFR only**“ or „**VFR only**“ depending on the country of approval

GYROPLANE PAYLOAD:

Front Seat Pilot:
60 kg min.
110 kg max.

Rear Seat Passenger:
110 kg max.

Empty weight: _____ kg

MTOW 560 kg

Gyroplane must only be flown solo from the front seat

COMPASS DEVIATION:

TO FLY	STEER	TO FLY	STEER
0		180	
30		210	
60		240	
90		270	
120		300	
150		330	

Calibrated with radio on

Calibrated by _____ date _____

In clear view of the pilot (if equipment installed):

GPS UNIT NOT FOR NAVIGATIONAL USE

The unit is not approved or certified to any international standard

WARNING!

Charts may not be in date

Boost switch (if installed):

BOOST

Flight control stick head:

ROTOR BRAKE

PTT

PRESS TO PREROTATE

Front seat:

OCCUPANT WARNING

This gyroplane has not been certified to an international standard.

BAGGAGE LOAD:

3 kg max.

max. pilot weight is reduced
pro rata by luggage weight

Aft seat:

OCCUPANT WARNING

This gyroplane has not been
certified to an international standard

Rear Seat Passenger:
110 kg max.

BAGGAGE LOAD:

5 kg max.

max. occupant weight is reduced
pro rata by luggage weight

Nose compartment:

BAGGAGE LOAD:

10 kg max.

max. pilot weight is reduced
by twice the luggage weight

Fuel filler neck:

FUEL CAPACITY 94 LTR.

UL91 (preferred fuel)
Super EN 228
Super Plus (MOGAS)
AVGAS 100LL permissible

On oil tank:

915iS

ENGINE OIL:

Capacity 3.4 ltr.
AEROSHELL OIL SPORT PLUS 4 or equivalent in accordance with BRP Rotax service instructions

916iS

ENGINE OIL:

Capacity 3,4 L
XPS SAE 5W50 Full Synthetic or equivalent in accordance with BRP Rotax service instructions

Coolant header tank:

COOLANT HEADER TANK:

Replenish with 50 / 50 Ethylene Glycol antifreeze and destilled water

COOLANT MUST BE VISIBLE

Battery charging port:

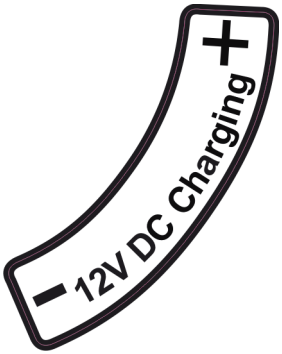

Keel tube fin:

INTENTIONALLY LEFT BLANK

CONTENTS

3.1 Engine Failure 3-1
3.2 Air Restart Procedure 3-2
3.3 Landing into Trees or High Vegetation 3-3
3.4 Degradation of Engine Power 3-3
3.5 Evacuating the Aircraft 3-3
3.6 Engine Fire 3-3
3.7 Off-field Landing 3-4
3.8 Flight Control Malfunction 3-4
3.8.1 Engine Power Control / Throttle 3-4
3.8.2 Rudder Malfunction 3-4
3.8.3 Rotor Head Control 3-5
3.8.4 Trim Runaway 3-5
3.9 Pitch oscillation recovery 3-5
3.10 Vibration 3-6
3.10.1 Engine and Propeller Vibration 3-6
3.10.2 Rotor Vibration 3-6
3.11 Other Equipment Failure 3-7
3.12 Warning and Caution Lights 3-9
3.12.1 Gen. 3 (amber) or Low Volt (amber) Indicator Light 3-9
3.12.2 Low Volt (amber) 3-10
3.12.3 Low Fuel (Red) If Installed 3-10
3.12.4 Fuel P. (amber) 3-10
3.12.5 Pitot (Amber) If Installed 3-10
3.12.6 Water Temperature Indication (Red) 3-10
3.12.7 Oil Pressure Indication (Red) 3-10
3.12.8 Clutch (amber) 3-11
3.12.9 Engine Lane A or Lane B warnings 3-11
3.13 Parameters out of Limits (where required, refer to the Rotax 915iS and 916iS Operators Manual) 3-13
3.15 Rotor System 3-13
3.16 Rotor Icing 3-14
3.17 Landing with a Deflated Tyre 3-14
3.18 Failure of CSP/VPP Propeller (if installed) 3-14

INTENTIONALLY LEFT BLANK

SECTION 3 - EMERGENCY PROCEDURES

This chapter contains the check lists and procedures to be executed in emergency situations.

Emergencies due to defects of the gyroplane or its engine are extremely unlikely if the aircraft is checked thoroughly before each flight, and maintained in accordance with the AMM. If there an emergency does occur, follow the appropriate guidelines below. These procedures do not replace the pilot's appreciation of the individual situation.

This gyroplane, like most recreational air vehicles, is fitted with a non-certified engine. This means that there may be a higher risk of engine failure than with a certified aircraft engine, with the associated risks of damage or injury as the result of an unplanned landing. Therefore strict compliance with the engine manufacturer's maintenance schedules, operational procedures and any additional instructions is essential. The aircraft must always be flown with the risk of engine failure in mind, and must not be flown over any areas where a forced landing cannot be safely executed.

The most common cause for engine failure is still improper fuel management!

3.1 Engine Failure

In case of an engine failure the following action is recommended:

Engine failure during take-off run

- Maintain directional control using sensitive but appropriate pedal input
- With the rotor/stick remaining aft, let gyroplane decelerate. Wheel brakes may be used to assist
- At walking speed level-off rotor disc, use wheel brakes and bring rotor to a stop

Engine failure after lift-off and below 150 ft AGL

- The climb-out should be performed according to the Height-Velocity-Diagram in CHAPTER 5
- When engine failure occurs, immediately lower nose to enter glide attitude
- Continue straight ahead – a 180° turn back to the airfield may be a bad option
- Maintain airspeed until ground is approached, then perform flare
- If a low level engine failure, with low groundspeed, then an aggressive and immediate flare may be required

Engine failure at or above 150 ft AGL

- Consider wind speed and direction
- Select a suitable landing site
- If time allows, a restart may be attempted, see "Air restart procedure" below
- Perform a landing into wind and/or upslope if possible
- Prior to touch-down switch OFF Main Switch

Engine failure at night

- Consider wind speed and direction
- Both landing lights should be turned on at 400ft or below.
- Select a suitable landing site – the landing lights make the ground visible in full dark from around 400ft (122m)
- If time allows, a restart may be attempted, see “Air restart procedure” below
- Perform a landing into wind and/or upslope if possible
- Make a faster descent at 120km/h (70mph, ~60KIAS), to allow more time in the flare to make a safe landing.
- Do not turn the main switch off, because this will turn off all lighting. Be prepared to turn the switch off if there is a risk of an accident.

WARNING

Engine failure at high speed, hands-off, will result in a nose drop, requiring pilot intervention to raise the nose. At light weight the nose drop will be rapid.

WARNING

Always plan your route to remain within safe gliding distance to areas where a safe forced landing can be performed in case of an engine failure. A landing in high trees or open waters may end with a serious accident.

NOTE

The best engine-off glide ratio is about 1:3 at between 90 – 100 km/h (55mph-60mph, 50-60 KIAS), which corresponds to a 3000ft (915m) horizontal range for a 1000ft (305m) vertical descent. A suitable headwind may enable the glide may be extended by slightly increasing airspeed. It is heavily recommended to train your forced landing capabilities regularly, preferably with a qualified flight instructor.

3.2 Air Restart Procedure

- Check fuel pump(s) ON
- Check both LANE switches ON
- Propeller in FINE pitch (if an in-flight adjustable propeller)
- Throttle slightly open
- With the left hand, turn the Main Switch/Starter key completely to OFF, then ON WAIT until the Lane A and B LEDs are illuminated before turning to START, otherwise the engine may not start!
- If possible, allow engine and oil to warm-up before full power is applied

NOTE

For actions and indications on engine failure in flight due to generator failure see AG-PIL-2024-01

The starter interlock function prevents inadvertent starter engagement. Before attempting an engine start, the interlock must be reset by turning the Main Switch/Starter key to OFF.

3.3 Landing into Trees or High Vegetation

- Assume the surface of the treetops or vegetation as level
- Plan touch-down and flare with minimum ground speed and minimum rate of descent
- As soon as the wheels contact the vegetation bring the rotor disc to level attitude to avoid partial blade tip contact with vegetation
- Shut down engine by switching LANE switches OFF and master switch OFF

3.4 Degradation of Engine Power

A gradual decay in engine RPM, accompanied by a rough running engine or even vibration will not be an indicator for carburettor icing, because the 9xxiS engines are fuel injected and have no carburettors.
If the cause cannot be determined and corrected, then be prepared for further loss of power and ultimately engine failure.

3.5 Evacuating the Aircraft

In normal circumstances occupants should never leave the aircraft while the propeller or the rotors are turning. If abandoning the aircraft in an emergency the pilot should turn off the engine LANE switches and turn the master switch to “OFF” if this can be done without endangering the occupants.

If abandoning the aircraft with either the propeller and/or the rotors turning the occupants should follow a path in line with the nose of the aircraft, to minimise the risk of being struck by either the rotor or the propeller.

Occupants should be briefed before flight on emergency evacuation procedures, including:

- Actions to be taken in the event of a forced landing
- Operation of the seat harness
- Disconnection of any intercom leads or other connections to the aircraft
- How to safely exit and move away from the aircraft

3.6 Engine Fire

In case of fire the following action is recommended:

Fire on ground

- Both LANE switches OFF and master switch OFF to shut-down engine and fuel pumps

- Evacuate aircraft
- Extinguish fire and have damage inspected

Fire in flight

- Immediately initiate an emergency landing
- Initiate emergency call, if time and situation permits
- As soon as a power-off landing can be assured, shut down engine by switching LANE switches OFF and master switch OFF
- Continue procedure as described in “Engine Failure” and “Fire on ground”

3.7 Off-field Landing

A precautionary landing at a non-prepared site may be performed at pilot’s discretion in order to avoid unexpected weather, in case of severe illness of the pilot or a passenger, or if technical defects are suspected, for example sudden and severe rotor vibrations.

- Select a suitable landing site from safe altitude, considering slope, wind speed and direction
- Fly a reconnaissance pattern to check for obstacles, especially power lines, wires, and cables in the approach and go-around path
- Overfly the landing site to check for obstructions such as fences, ditches, rocks, height of vegetation, and select most suitable touch-down zone
- Perform a normal approach and touch-down into wind with minimal ground speed

3.8 Flight Control Malfunction

In case of a flight control failure the gyroplane can be controlled with the remaining primary and secondary controls, including power and trim. An immediate reduction of power, respectively speed, may be necessary to avoid pitch oscillations (phugoid) or other effects affecting dynamic or static stability. Navigate to a suitable landing site with wide and shallow turns and approach into wind.

3.8.1 Engine Power Control / Throttle

(i) Throttle jammed open or max

Navigate to a suitable landing site with the power set. When within gliding distance to the selected landing site, shut-down engine to perform a power-off landing as per Emergency Procedure “Engine failure”.

NOTE

In case of a control cable breakage the throttle will be automatically set to full throttle position.

(ii) Throttle jammed closed

Land according to chapter Emergency Procedure “Engine failure”. Residual power may be used to extend the glide.

3.8.2 Rudder Malfunction

In case of a stuck or loose rudder, continue flight to a suitable, preferably wide landing site that allows a landing into the wind. If necessary reduce power to avoid excessive side slip. Align gyroplane prior to touch-down, using engine torque or lateral control input to the side where the nose is pointed.

3.8.3 Rotor Head Control

In case of a rotor head control malfunction, control gyroplane using trim and remaining controls. Perform power changes carefully and memorize possible effects on attitude. In some conditions it may be appropriate to reduce power/speed in order to avoid phugoid effects or a possible negative yaw-roll coupling. Approach landing site with wide and shallow turns.

3.8.4 Trim Runaway

Failure of a trim selector switch or pneumatic valve may result in trim runaway (where the trim system runs to one extreme and pushes the control stick accordingly). Although the average pilot is able to resist the out-of-trim stick force and continue to fly the aircraft it may be possible to reduce the stick load by intervention:

(i) Aft Trim Runaway

High forward stick load required to prevent aircraft nose rising (this will be coincident with a high air-pressure reading) – briefly turn the Flight/Brake selector to “Brake” to deplete system air pressure. If the air compressor is heard to start and the pressure rises again then pull the fuse marked “Comp” to stop the compressor. Repeat the brief selection of “Brake” to deplete system air pressure as required.

(ii) Forward Trim Runaway

High aft stick load required to prevent aircraft diving (this will be coincident with low or zero air pressure) – check “Comp” fuse. If situation cannot be corrected, land as soon as practicable.

(iii) Roll/Lateral Trim Runaway

High roll-left or roll-right stick load required to maintain balanced flight (coincident with high air-pressure reading). Pull the “Comp” fuse to prevent further increase in air pressure and attempt to re-trim. If unsuccessful then continue to expedite landing. Do not select “Brake” in an attempt to reduce air pressure as this will disturb the pitch trim (in which the out-of-trim forces are significantly higher).

The ’Flight/Brake’ changeover switch exists in two versions. Pneumatic, whereby the internals mechanically change the valve selection, and latterly where the switch electrically connects the correct valve in the pneumatic system. The electrical switch requires the keyswitch to be on with electrical power to function.

3.9 Pitch oscillation recovery

There are generally two types of pitch oscillation: that caused by pilot over control (‘PIO, Pilot Induced Oscillation’) and that caused by aerodynamic oscillation.

PIO is not generally found on two seat gyroplanes due their inherent stability. It is initiated by the pilot over-controlling the stick. If a situation develops where a divergent aircraft pitching

oscillation is occurring in sympathy with fore-aft control stick inputs, firstly stop the control input – do NOT try to control PIO with the stick.

For both situations, smoothly closing the throttle whilst maintaining a level flight attitude will return the aircraft to a stable, slow speed condition very quickly, from which the pilot can recover to normal flight.

Recovery from PIO or aerodynamic oscillation can result in height loss.

3.10 Vibration

A gyroplane is subject to a number of out of balance forces which will generate different levels of vibration depending on the engine and rotor rpms, and on loading conditions. Rotors are normally balanced two seated, so a reduction in occupant loading will naturally change the rotor response.

3.10.1 Engine and Propeller Vibration

Vibration in this area will change with engine rpm, and can therefore be affected and isolated by the pilot. The propeller is normally balanced to less than 0.1ips, meaning low vibration. Vibration will increase as the propeller gets dirty, and will also increase if damaged. A sudden change in flight will indicate a fault has developed, either through an impact (loose luggage, bird strike etc. passing through the propeller) or by some mechanical failure. In the event the pilot should make a precautionary landing for evaluation. Propeller damage may also be evident from a change in noise level.

Upon landing, carefully check the propeller for damage, loose bolts or evidence of mechanical failure within the prop or engine. Especially check the engine to engine bearer connections, and the engine bearer to airframe connections.

3.10.2 Rotor Vibration

Rotors will vibrate in flight due to tracking errors (side to side stick shake), rotor CG misalignment with the axis of the bearing in the flat plane (oscillatory stick shake), and also in the vertical plane (two per rev shake). The amount of shake will not suddenly change in flight or between flights unless there has been mechanical failure, external influence or rotor strike.

Rotor vibration also depends on the rotor rotational speed, which in turn is dependent on airspeed and aircraft loading.

Vibration will increase (and performance decrease dramatically) with dirt build up on the rotor blades, so before any analysis make sure they are clean.

If there is a change in vibration in flight make a precautionary landing and investigate. If on rotor start-up, stop and investigate:

Check items:

- Rotor impact with tail of aircraft.
- Hanger damage e.g. twist or distortion of trailing edge.
- Blade bent from ground handling.
- If after a recent re-assembly of the rotor, that the blades and hubs are serial-number matched, and that the shim washers are correctly matched to the hub bar and rotor tower.

An increase in vibration may be caused by increased flexibility between the rotor head and the occupant. This may be control system looseness, so check all system joints for tightness, and also for cracks at the base of the mast. Check security of all fastenings between the rotor and the pilot.

3.11 Other Equipment Failure

Good judgement must be used in monitoring instruments, and timely action taken should a reading be in doubt. If in doubt, make a precautionary landing and resolve the issue rather than continuing a flight.

Actions recommended:

(i) Airspeed Indicator failure

In level flight fly with an engine rpm of 4,200 lightly laden to 5,000 heavily laden which will give approx. 105-130 km/h (60-80 mph, 55-70 KIAS). When descending (nose down) throttle back to approx 3,000 to 3,500 rpm to prevent over-speed. Continue to your designated landing site, maintaining speed for a flare on landing in the final descent. Leave plenty of space to land in should the flare be prolonged. Experience will aid judgement of the best engine rpm to maintain to match the desired flight speed and payload.

(ii) Altimeter failure

In a gyroplane it is reasonably easy to judge height. If in controlled airspace ensure the controlling authority is informed to prevent traffic conflict. Otherwise continue to a safe landing using navigational skills to avoid potential collisions.

NOTE

The configuration menu on the electronic ASI and ALT devices can be accessed to change between different units of measure.

If a device turns off uncommanded, this could signify a software reset has been signalled internally. Attempt to manually restart the unit by depressing the power button. If the device does not restart assume the instrument has failed.

(iii) Compass

Resort to map, aided by GPS if available, fly at a speed to suit navigational requirements or make a precautionary landing if unable to identify position.

(iv) Rotor RPM gauge

This is not essential for safe flight, and rotor rpm cannot normally be affected in flight unless significant “g” or negative “g” is exerted – and then will only provide an indication of the rpm. If failed in flight, repair on landing

(v) Engine RPM

The engine is rpm self-limiting by propeller pitch in flight. If the indication fails, replace on landing. Use audio cues to establish rpm

(vi) Oil pressure, oil temp and ECT/coolant temp

Abnormal indication of one gauge can indicate an engine fault or simply a gauge fault. Watching the other gauges will indicate the likely failure mode.

For example:

Abnormal indication	Probable failure mode
Gauge suddenly goes to full scale deflection, other gauges reading normally	Gauge faulty
Oil temp suddenly falls to zero, other gauges reading normal	Gauge faulty. Cross refer to oil pressure gauge, if there is pressure there is likely to be temperature
Oil temp rises above maximum, other gauges normal	Very low oil level, blocked radiator or thermostat. Stop engine, make precautionary landing
Oil pressure falls to zero, possible loss of pressure.	Warning LED will also light. If lit, Stop engine, make precautionary landing. If not, monitor, and prepare for possible stoppage.
Coolant temp gradually or suddenly rises above max temp	Check coolant warning LED. If not lit then probable gauge failure. If lit, possible loss of coolant. Stop engine, make precautionary landing
Fuel level gauge suddenly falls to zero or FSD	Probable gauge failure, but always cross check to predicted fuel burn. Low fuel light will light as a backup.

Sudden, large deflections are normally unlikely, with the exception of loss of pressure readings.

CAN-Bus note

The engine parameters (Coolant temp, coolant led, oil temp, oil pressure and engine rpm) are provided via the Can-Bus system to the gauges, via a digital to analogue Convertor. On start up the gauges initially go to full scale deflection, the normal Road gauge manufacturer's process.

The Convertor then self-checks by displaying the red line indication, dropping to the green line indication.

The Convertor compares the information provided by the two CAN-Bus inputs.

If one input fails the unit will display the information from the other CAN-Bus.

If both fail the indication is zero, but the gauge internal warning light illuminates.

If the information provided shows a significant discrepancy the gauge will go to FSD and the internal warning lamp will illuminate.

In the event of a dual CAN-Bus input failure, or Convertor failure, no information will be displayed on the gauges.

In this situation, and provided the Lane A or B lamps are unlit, the engine will run normally. Land at the earliest safe convenience for system rectification.

3.12 Warning and Caution Lights

3.12.1 Gen. 3 (amber) or Low Volt (amber) Indicator Light

The (optional) GEN3 lamp, when lit, indicates that there is no voltage being supplied from the aux generator/regulator circuit. There are no warning lamps for GEN 1 and GEN 2.

GEN1 supplies the engine EMS system only.

GEN2 supplies the aircraft on board systems, and is a backup to GEN1

GEN3 is an aux generator, supplemental to GEN2 for aux equipment

All lamps are normally lit when the engine is stationary or at very low rpm.

These lamps are not normally lit in flight, but may be seen to pulse gently in low light conditions.

If during normal operation GEN1 fails, the ECU automatically switches over to supply the EMS by using GEN2. Both the LANE lamps will start flashing, advising the pilot of the failure. If the engine is supplied by GEN2 the engine is able to deliver full performance. There is performance drop while the engine switches the supply from GEN1 to GEN2.

However, this transfer will mean that GEN2 primarily supplies the engine, with only excess generated energy supplying the airframe. If the LOW VOLT lamp lights, reduce electrical demand

If GEN2 supply fails, there is no direct indication. However, because the aircraft is operating on battery power alone, the ‘LOW VOLT’ indication will almost immediately light, warning the pilot of the fault and that system voltage has dropped below 11.8v.

If both GEN1 and GEN2 fail, then the engine will stop unless powered from an external source.

Required Action:

If the LOW VOLT lamp is lit, then the aircraft voltage demand has exceeded supply, and demand must be reduced in order for the lamp to extinguish. NOTE! When lit, this lamp also indicates that the heated seats, heater fan and 12v socket have been turned off automatically, with automatic reconnection when the supply exceeds demand.

Turn off all unnecessary electrical consumers, and expect the aircraft systems to last a maximum of 30mins before running out of electrical energy.

If the ‘LOW VOLT’ lamp is ON, the engine has stopped, and there are no engine instrument readings, then it is likely that BOTH generators have failed. Immediately activate the battery backup switch (lift red cover and switch) this will provide electrical power to the engine and aircraft systems from the battery.

Restart the engine if safe to do so (or make emergency landing). Turn off all unnecessary electrical consumers. Land as soon as practical and rectify.

In GEN 2 failure case, the battery is expected, if in good condition, to provide 30 minutes* of reserve power to supply the aircraft, instrumentation and avionics, after which time electrical equipment may cease to function. Be prepared for an engine stoppage.

In the event of a dual (GEN 1 and GEN 2) generator failure, the battery, if in good condition, is expected to provide a minimum of 25mins of normal aircraft operation.

*depends on capacity/ age of the battery

NOTE

For actions and indications on engine failure in flight due to generator failure see AG-PIL-2024-01

3.12.2 Low Volt (amber)

Battery voltage of the system has dropped below a safe value. Refer to chapter 3.12.4 above. Non-essential services and the 12V power socket will be disabled automatically.

Where a G3x is fitted, the electrical system status is viewed within the display.

3.12.3 Low Fuel (Red) If Installed

The LOW FUEL warning light is triggered as soon as 5 litres or less of useable fuel remain in the tank. Perform a power-on landing at the nearest suitable location and be prepared for engine failure after approximately 10 minutes remaining flight time.

3.12.4 Fuel P. (amber)

This indication serves to indicate low or high fuel pressure. Low fuel pressure is indicated by a solid light, high fuel pressure by a flashing light.

Lamp will indicate on start up until fuel pressure reaches minimum required.

Where a G3x is fitted, the fuel pressure is monitored within the display.

If lit in flight, check fuel level. Turn on standby fuel pump, if fitted. If the light remains on, and there is sufficient fuel, this could indicate a blocked fuel supply. Be prepared for an engine stoppage and reduce power. Land as soon as practicable and have maintenance action performed.

3.12.5 Pitot (Amber) If Installed

This indication serves to indicate a failure of the pitot heat circuit, if pitot heat has been activated via the Pitot switch.

3.12.6 Water Temperature Indication (Red)

This lamp illuminates RED when the coolant temp reaches 120 °C (248 °F). If lit, reduce power. If condition cannot be corrected, land as soon as practicable.
Where a G3x is fitted, the water temp status is viewed within the display.

3.12.7 Oil Pressure Indication (Red)

Lighting up of the Oil Pressure Indication signals a problem within the lubrication system, which is characterised by a drop of oil pressure to or below 0.8 bar. If Oil Pressure Indication

is lit cross-check with Oil Pressure Instrument, monitor Oil Pressure Instrument and consider landing. Be prepared for engine failure.

3.12.8 Clutch (amber)

(i) Continuous light

The lamp lights if there is a mismatch between pre rotator speed and engine speed through the drive clutch, which could lead to clutch or gearbox damage.

Reduce engine RPM to closer match the rotor speed, and be gentler when increasing power.

(ii) Flashing light

The light flashes if the engine rpm is over 5000, and the rotor rpm is below 200, suggesting a possible take-off run with low rotor RPM – indicating a danger of blade flapping.

Reduce power immediately, and stop if take-off has started. Re-apply the pre-rotator and increase rotor RPM first. If the correct take-off rotor RPM cannot be reached, abort take-off.

3.12.9 Engine Lane A or Lane B warnings

Lane A lamp	***Lane B lamp***	***Effect on engine***	***Proposed action on ground if Warning lamp is persistent***	***Proposed action in flight***
Off	Flashing	No effect on engine power, 2 EMS systems available	Maintenance action required	Flight is possible to your destination at your own discretion.
Flashing	Off	No effect on engine power, 2 EMS systems available	Maintenance action required	Flight is possible to your destination at your own discretion, precautionary landing recommended.
Off	On	No effect on engine power, engine is reliant on single EMS system	Maintenance action required	Flight is possible to your destination at your own discretion.
Flashing	Flashing	No effect on engine power, rely on alternate power supply system	Maintenance action required	Flight is possible to your destination at your own discretion.
Flashing	On	No effect on engine power, engine is reliant on single EMS system	Maintenance action required	Flight is possible to your destination at your own discretion, precautionary landing recommended.
On	Off	No effect on engine power, engine is reliant on single EMS system	Maintenance action required	Flight is possible to your destination at your own discretion

On	Flashing	No effect on engine power, engine is reliant on single EMS system	Maintenance action required	Flight is possible to your destination at your own discretion, precautionary landing recommended
On	On	Loss of engine power possible (loss of power control up to in-flight shutdown), system relies on default values and tries to maintain operation	Maintenance action required	Emergency battery power required. Flight is possible to your destination at your own discretion if within battery range. If not, land as soon as practical

NOTE

For actions and indications on engine failure in flight due to generator failure see AG-PIL-2024-01

NOTE

The EMS system monitors oil temperature versus engine rpm. If the oil temperature is below 50°C (122°F) and engine rpm held above 2,500, then the Lane B lamp will start flashing to warn the pilot that the engine is not at normal operating temperature. Reduce rpm and reset the warning by turning the Lane B switch off and on again.

If a warning indicator flashes, it indicates an error with lower severity (Fault) that has been detected by the internal testing procedures of the ECU. In this case the ECU will continue to operate normally. There will be no transfer of control of the ignition and injection to the error-free Lane.
If a warning indicator remains on permanently, it indicates that a fatal error with higher severity (Failure) has been detected by the internal testing procedures of the ECU. In this case, the ECU will continue to operate in an alternative control mode, which will transfer the control of ignition and injection to the error-free Lane. In the instance of a permanently lit lamp, first turn the Lane switch for that specific lane off, and on again.

Warning

If one Lane lamp is lit, then the other is managing the engine. Turning off the incorrect Lane switch will stop the engine! Take care to choose the correct switch!

If the fault re-occurs, then land the aircraft at the next safe opportunity and investigate. Flight with only one Lane working correctly is not permissible.

A single operational Lane provides normal engine operation and full engine power. Differences arise only in the efficiency of the engine.

In the event of a LANE A failure, the engine rpm fuel pressure and coolant temperature gauge indications will show zero, and the in-gauge warning lamps will be illuminated.
In the event of a LANE B failure, the oil pressure and temperature gauge indications will show zero, and the in-gauge warning lamps will be illuminated.

3.13 Parameters out of Limits (where required, refer to the Rotax 915iS and 916iS Operators Manual)

PARAMETER	EXCURSION	CORRECTIVE ACTION
Engine rpm	5800 maintained for more than 5mins	Reduce rpm to 5500. Ensure engine parameters have not been exceeded, and if exceeded follow Rotax 915iS or 916iS Operators Manual instructions
Engine Oil Temperature	Upper **limit**	Reduce power and increase air speed. If condition cannot be corrected, land as soon as practicable.
	Lower **limit**	Allow engine to warm-up on ground.
	Within lower **yellow arc**	Uncritical as long as oil temperature has reached normal operating range at or after take-off.
Coolant Temperature	Upper **limit**	Reduce power and increase air speed. If condition cannot be corrected, land as soon as practicable.
EGT where shown	Upper **limit**	Reduce power. If condition cannot be corrected, land as soon as practicable.
Engine Oil Pressure	Upper **limit** or	Reduce power. If condition cannot be corrected, have maintenance action performed prior to next flight.
	Lower **limit**	If combined with other indications, such as rising oil temperature or unusual engine behaviour, shut-down engine and perform a power-off landing as per Emergency Procedure “Engine failure”. Otherwise, monitor engine instruments carefully and land as soon as practicable. Have maintenance action performed.

3.14 Outside Air Temperature

An outside Air Temperature (OAT) indicator is provided.

3.15 Rotor System

The entire rotor system including its rotor head with blade attachments and the corresponding components of the flight controls have to be inspected and maintained carefully.

If any undue vibration or unusual behaviour is experienced a precautionary landing should be considered.

3.16 Rotor Icing

A more than normal or constantly increasing power demand may be caused by an iced-up rotor system. This could ultimately result in a condition where altitude cannot be maintained, even at maximum power. An iced-up rotor system can also cause severe vibration. If any of the signs for rotor icing is evident, carry out a precautionary landing.

NOTE

Icing may occur even at temperatures above freezing!

3.17 Landing with a Deflated Tyre

Plan to land directly into the wind with minimum rate of descent at touch-down, if possible on a grass runway. Maintain directional control with adequate pedal input. Consider the use of some propeller thrust to increase rudder effectivity. Lower nose gently with the nose wheel pointing straight.

Alternatively, if landing on asphalt is unavoidable, approach normally, with the intent of a zero-speed touch-down directly into wind.

Only if impossible to recover the aircraft from the landing area it should be manoeuvred under its own power, as this could further damage the tire and wheel rim.

3.18 Failure of CSP/VPP Propeller (if installed)

There are two types of propeller control fitted with Woodcomp KW30 propeller.

- Manual control, evidenced by a blue aviation-standard panel mounted adjustment knob
- Automatic control, evidenced by the fitment of the Woodcomp propeller, but lack of a blue panel knob.

Noticeable defect:

In case of a noticeable mechanical defect, indicated by sudden vibration or noise, perform a precautionary landing.

Run-away:

Propeller pitch changes without command, usually resulting in unexpected or sudden change in engine RPM and engine manifold pressure.

Run-away to FINE: RPM will increase and propeller pitch will stop in full FINE position. Reduce power if needed, to stay within RPM limits.

Run-away to COARSE: RPM will decrease until propeller pitch stops in full COARSE position. Reduce power if needed.

Continue according to emergency procedure ‘FREEZE’.

Random propeller adjustment. RPM versus power unpredictable (automatic control only). Isolate propeller control by pulling ‘PROP’ CB. If no effect, reduce engine rpm to prevent over-revving, and land at the next suitable location to investigate.

Freeze:

Propeller pitch does not react to pilot input, engine RPM does not change while propeller pitch control is activated. Proceed according to the following table:

Before take off	Do not take-off
During take-off and climb	Try to keep climbing to a safe altitude, return to the airfield and land. If the aircraft does not climb, maintain altitude and to return in a flat curve.
During cruise flight	Depending on the prop position, it should be possible to find a speed and RPM to continue the flight to the next possible landing area. Depending on the prop position your descent will look different and a go around is probably not possible.
During descent	Depending on the prop position (in case of cruise), your descent will look different and a go around will probably not be possible.
During landing	Continue approach as planned. If the prop changes to cruise and the landing looks too long, keep in mind to cut the engine.

3.19 Alternative Method of Engine Shut-Down

If the engine continues running after the LANE switches have been switched off, turn the master switch to off to deactivate both primary and secondary electrical fuel pump. The engine will starve after approximately 30 – 60 seconds.

INTENTIONALLY LEFT BLANK

CONTENTS

4.1 Airspeeds for Safe Operation 4-1
4.2 Preparation for Flight 4-1
4.3 Daily or Pre-flight Checks 4-1
4.4 Before Boarding 4-5
4.5 Before Starting Engine 4-6
4.6 Starting Engine 4-6
4.7 Taxi and Run-up 4-7
4.8 Take-off Procedure 4-10
4.9 Take-off Run 4-12
4.10 Climb 4-12
4.11 Cruise 4-13
4.12 Descent 4-13
4.13 Approach 4-13
4.14 Landing 4-14
4.15 Go-around 4-14
4.16 After Landing 4-15
4.17 Engine Shut-down 4-15
4.18 Parking 4-16
4.19 Special Procedure: Short Field Take-off 4-16
4.20 Special Procedure: Slow Speed Sink and Recovery 4-17
4.22 Engine In-flight Shut-down and Air Restart 4-17
4.23 Noise Abatement 4-18

INTENTIONALLY LEFT BLANK

SECTION 4 - NORMAL PROCEDURES

This section contains check list items, instructions and procedures for the operation of the gyroplane. However, these procedures do not replace the pilot's appreciation of the individual situation.

4.1 Airspeeds for Safe Operation

Climb ..... 115 km/h (70mph, 60KIAS) IAS
Best rate of climb / best endurance..... 110 km/h (65mph, 57KIAS) IAS
Best range ..... 115 km/h (70mph, 60KIAS) IAS
Approach ..... 100-120 km/h (60-70mph, 50-55KIAS) IAS

Approach speed for fixed wing aircraft is based on stall speed; but gyroplanes cannot stall. Therefore gyroplane approach speed is based on good practice. Higher or lower speeds can be used, slowing to a safe touchdown speed just before landing.

4.2 Preparation for Flight

The pilot shall be familiar with the aircraft limitations detailed in SECTION 2 of this manual and shall have performed proper flight planning considering required legal aspects, as well as SECTION 5 'PERFORMANCE' and SECTION 6 'WEIGHT AND BALANCE' of this manual. The use of check lists as provided in this manual is mandatory for a safe operation.

4.3 Daily or Pre-flight Checks

All daily or pre-flight check list items consist of visual checks and do not replace professional scheduled inspection and maintenance. The following check list is applicable to the standard MTOsport Model 2017 gyroplane.

Note that depending on optional equipment installed the necessary checks may include additional items according to the flight manual supplement provided with the optional equipment. It is advisable for the owner/operator to compile his own check list to match his particular configuration.

The pre-flight check is structured into 11 stations which are organized as a clock-wise walk-around to provide a logical flow and sequential order, thus minimizing the risk of left-over or overlooked items.

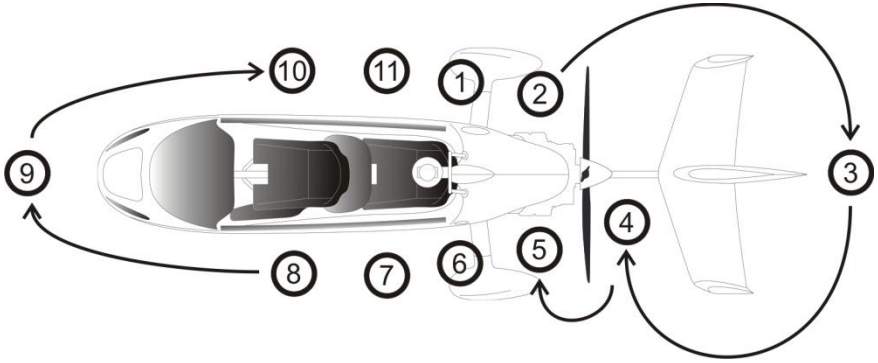

The following checks must be carried out before each flight. However, if the gyroplane is operated by a single pilot or within an organization where the checks are performed by or under the supervision of qualified personnel, check list items marked with a preceding 'Θ' may be carried out daily, before the first flight of the day.

Before exterior check

Θ Fuel tank drain(s) ..... Sample and check sealed
Θ Snow/ ice (if any) ..... Removed
Documents ..... Check complete

Exterior check

Station 1 (fuselage, RH side)

Θ Before turning prop: Remove keyswitch key, LANE switches ..... Check OFF
Open oil tank access door
Θ Engine oil level ..... Check
Dipstick and oil cap ..... Installed and secure
Θ Coolant level (sight glass) ..... Sufficient
Θ Hoses ..... Condition, fittings tight
Θ Fuel tank breather ..... Clear
Θ Main frame and welded joints ..... No cracks, no deformation
Close access door
RH Main wheel ..... Check
Air pressure and slip mark ..... Visual check
Θ Brake, disc attachment (4 bolts) and wheel attachment ..... Condition / tight
Wheel spat and attachment ..... Condition / tight
Bell crank and control rods ..... No play, secure
Mast and weld seams ..... No cracks, no deformation
Pre-rotator coupling sleeves ..... Free to move and greased
Trim/brake actuator and lines ..... Condition / tight

Gimbal head and rotor head

Upper control rod ends ..... No play, tight and secure
Gimbal head attachment lugs and weld seams ..... No cracks
Gimbal head bolts (2x) ..... Tight, split pin installed
⊙ Main rotor bearing ..... Check condition and split pin installed
⊙ Pre-rotator assembly and brake ..... Check condition
⊙ Teeter bolt (bolt end) ..... Rotor must teeter freely on bolt
Teeter bolt (nut end) ..... Split pin installed
⊙ Teeter stops ..... Check condition
⊙ Rotor hub and blade clamping area ..... No cracks, no deformation
Blade attachment bolts (6x per blade) ..... All tight and secure
⊙ Inner blade caps ..... Tight

Station 2 (engine, RH side)

⊙ Main frame and welded joints ..... No cracks, no deformation
⊙ Main gear spring spar attachment ..... No cracks, attachment tight
Main gear spring spar, underside ..... No cracks
Oil cooler and hoses ..... Condition, fittings tight
⊙ Battery, relay and cabling ..... Secure, no chafing
⊙ Flight control base link and lower rod ends ..... All bolts secure
⊙ Engine mount: 2 rubber mounting bushings ..... Condition
Exhaust system ..... Tight, no cracks
Engine oil and coolant hoses ..... Condition, fittings tight
Spark plugs (4x), connectors and cables ..... Condition, connectors tight
Radiator and hoses ..... Condition, fittings tight
Oil filter ..... Dry and tight
Generator/alternator, cabling and drive belt (if inst.) ..... Condition

Station 3 (stabilizer)

Stabilizer general condition ..... No damage
Stabilizer attachment ..... No cracks, attachment tight
Main frame aft end ..... Condition
⊙ Rudder control linkage ..... Articulation rods and bulkheads tight
⊙ Upper rudder bearing ..... Secure, no play
Rotor blades ..... Condition and cleanliness
Blade tips ..... Tight

Station 4 (propeller and frame)

Propeller ..... Condition and cleanliness
Propeller leading edge and tips ..... No damage
Propeller flange bolts ..... Tight
CSP/VPP propeller (if installed) ..... Check
⊙ Rear main frame and welded joints ..... No cracks, no deformation
Keel tube protection pad ..... No excessive wear

Station 5 (engine, LH side)

⊙ Main frame and welded joints ..... No cracks, no deformation
⊙ Main gear spring spar attachment .....No cracks, attachment tight
Main gear spring spar, underside ..... No cracks
Oil cooler and hoses .....Condition, fittings tight
Fuel level..... Cross-check with cockpit indication
⊙ Flight control base link and lower rod ends.....All bolts secure
⊙ Engine mount: 2 rubber mounting bushings ..... Condition
Exhaust system.....Tight, no cracks
Turbocharger / waste gate ..... Condition
Air filter..... Clean and tight
Engine oil and coolant hoses / heat shields.....Condition, fittings tight
Spark plugs (4x), connectors and cables.....Condition, connectors tight
Radiator and hoses.....Condition, fittings tight

Station 6 (fuselage, LH side)

LH Main wheel ..... Check
Air pressure and slip mark ..... Visual check
⊙ Brake, disc attachment (4 bolts) and wheel attachment ..... Condition / tight
Wheel spat and attachment ..... Condition / tight
Bell crank and control rods ..... No play, secure
Mast and weld seams ..... No cracks, no deformation
Pre-rotator coupling sleeves ..... Free to move and greased
Trim/brake actuator and lines ..... Condition / tight
Gimbal head and rotor head
Upper control rod ends ..... No play, tight and secure
Gimbal head attachment lugs and weld seams ..... No cracks
Gimbal head bolts (2x).....Tight, split pin installed
⊙ Main rotor bearing.....Check condition
⊙ Pre-rotator assembly and brake.....Check condition
⊙ Teeter bolt (bolt end).....Rotor must teeter freely on bolt
Teeter bolt (nut end) ..... Split pin installed

Station 7 (passenger station, LH side)

Aft control stick.....Removed or secure as required
⊙ Control linkage and support bearing ..... Check

Station 8 (pilot station, LH side)

⊙ Throttle lever ..... Check function, full travel
⊙ Brake lever and lock..... Check function and condition
⊙ Brake fluid level..... Between marks
⊙ Pedal control linkage..... Cables, articulation rods and bulkheads tight
Static port..... Clean and open

Station 9 (nose)
General appearance ..... OK
Pitot tube ..... Clean and open
Windshield ..... Condition and cleanliness
Storage compartment in nose section ..... Closed and locked
Θ Nose wheel ..... Condition and air pressure

Station 10 (pilot station, RH side)
Static port ..... Clean and open
Control stick bolts and nuts ..... Tight and secure
Θ Pedal control linkage ..... Cables, articulation rods and bulkheads tight
Θ Main frame and welded joints ..... No cracks, no deformation
Loose objects ..... Removed/secured

Station 11 (passenger station, RH side)
Aft seat belts ..... Fastened and tight
Rudder control cables ..... Free
Rudder control cable tension ..... Check
Θ Main frame and welded joints ..... No cracks, no deformation
Loose objects ..... Removed/secured

CAUTION

The rotor must teeter freely on the teeter bolt

NOTE

When checking the oil level, the level should be in the upper half (between the "50%" and the "max" mark) and should never fall below the "min." mark of the oil dipstick. Prior to long flights oil should be added so that the oil level reaches the "max" mark.

Avoid oil levels exceeding the "max" mark, since excess oil could then be vented out through the venting system.

Difference between max.- and min.- mark = 0.45 litre (0.95 liq pt).

Oil consumption max 0.06 l/h (0.13 liq pt/h).

4.4 Before Boarding

Fuel level ..... Cross-check with cockpit indication
Fuel filler cap ..... Installed and secure
Pneumatic mode selector ..... Check BRAKE position
Rotor brake pressure ..... Check/set min. 6 bar
Rotor tie-down bag ..... Removed and stowed

Passenger station:

Passenger ..... Briefed and secure (helmet, hair, gear)
Aft seat belts ..... Fastened and tight
Loose objects ..... Removed / secured
Luggage bags ..... Secured

Pilot station:

Loose objects ..... Removed / secured
Document bag ..... Closed
Luggage bags ..... Secured

4.5 Before Starting Engine

Grab bar (if installed) ..... Ensure bar is down, and locked in place
Pedals ..... Adjusted and locked
Seat belts ..... Fastened
Helmet(s) ..... Secure
Flight suit(s) ..... All pockets closed
Flight controls ..... Free

4.6 Starting Engine

Parking brake ..... Set
Master keyswitch ..... ON

Note GEN 3 indicator light ON (where fitted)

Note LOW VOLT may flash briefly or stay ON depending on battery condition (Alternatively monitor the G3x display)

Note the buzz of the electrical fuel pump.

Pump 2 ..... ON

Note (increased) fuel pump buzz when Pump 2 is turned on.

Pump 2 ..... OFF
(Rotax recommend only one pump switched ON for starting)

Variable pitch propeller (if installed and manually controlled) ..... FINE
ACL / Strobe (if installed) ..... ON
Both LANE switches (A and B) ..... ON

The Lane A and Lane B lamps will light. They should extinguish after approx. 3 Secs after start.

Throttle ..... set as per the below graph for easy start, depending on ambient temperature. The exact position is not critical.

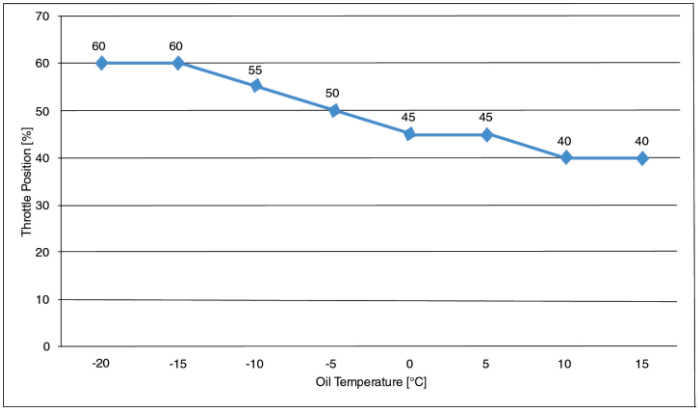

Propeller and area ..... "Clear"
Starter (with right hand, left hand on throttle/brake) ..... Engage

Hold starter until engine fires, but for a maximum of 10 seconds. Generally the engine fires immediately. In case of an unsuccessful starting attempt check all preconditions. Wait at least 20 seconds to allow cooling of battery and starter motor before repeated activation.

Throttle ..... Reduce after start to idle or as required
Oil pressure ..... min. 3.0 bar before increasing engine speed
All engine gauges ..... Ensure indications are within limits
Second fuel pump (Pump 2) ..... ON
Generator switching .... Increase engine rpm above 2400 rpm & hold for 8 secs (wait until the engine has warmed up, otherwise a Lane B caution may be lit).
Electronic Airspeed indicator and altimeter ..... ON
Avionics/Radio/Intercom ..... ON
Altimeter ..... Set

WARNING

Never attempt to start the engine until the area around the propeller is completely clear of any persons or objects. Do not start the engine while standing beside the aircraft as you will easily be struck by the propeller in case of a brake failure or an operating error.

4.7 Taxi and Run-up

During taxi do not exceed 15 km/h (10mph, less than 10KIAS) which is approximately jogging speed and steer with careful pedal input. Use wheel brake carefully, if needed, but not before throttle lever has been completely pulled to idle. Control stick should always be maintained in

forward centre position. When taxiing on uneven ground, use particular caution and hold control stick so as to avoid the blades or control system hitting their mechanical stops.

Carry out engine run-up in an area with least risk to individuals and other airport ground traffic, preferably headed into the wind. If dark, switch on the nose mounted landing lights.

Warm-up RPM2000 RPM for 2mins, then 2500 until oil reaches 50degC (122°F)
Oil temperature and other engine indications ..... within limits

At taxi holding position:
Lane checks. Set engine rpm at a nominal 2500 rpm
Lane A check; switch Lane A OFF..... max. permitted rpm change: +/-250 RPM
Lane A warning lamp must light.
Switch Lane A back ON, and wait for warning lamp to extinguish.
Wait 3 secs minimum after the lamp extinguishes for next check.
Lane B check; switch Lane B OFF..... max. permitted rpm change: +/-250 RPM
Lane B warning lamp must light.
Switch Lane B back ON, and wait for warning lamp to extinguish.

Perform check with right hand while left hand resides on throttle/brake.
Return the throttle to 2000rpm

Repeat these checks at as high a throttle setting as can be safely held by the aircraft brakes, recommended at above 4,500rpm.
When each Lane is switched off, wait a minimum of 15 seconds before switching the Lane back on. The engine must run normally, and warning lamp extinguish when switched back on.

NOTE

It is possible that the engine speed will increase by approx. 500rpm when switching off Lane A.

Note

Lane A and Lane B have different sensor inputs. During Lane and Ignition check, some sensor values are not displayed, depending on the activation of the Lanes

Following sensor values are not available if Lane A is turned OFF and Lane B is activated:

- **Coolant temperature**
- **Exhaust gas temperatures from cyl. 1-4**
- **Ambient temperature**
- **Throttle lever position**

Following sensor values are not available if Lane B is turned OFF and Lane A is activated:

- **Oil temperature**
- **Oil pressure**

Fuel pump check
It is not possible to turn off the primary fuel pump, this is activated with the keyswitch. Low fuel pressure is indicated by the LED warning lamp indicating red. Excessive pressure is indicated by flashing red.
The light must remain off when either one or both pumps are on.

Functional check VPP (if installed)..... execute (see 9-1.4.3)
Set Prop to FINE (MAX RPM)
Electronic Primary Flight display, where fitted. Observe that gyro compass matches magnetic compass, and that other indications are normal.
Throttle ..... Idle
Warning and caution indications .....None
Instruments / altimeter..... Cross check
NAV lights and anti-collision lights .....As required
Second fuel pump P2 (if installed) .....ON
Approach and runway ..... “Clear”, then line-up

For night flight:
Use nose landing lights to taxi, and under-body landing light for take-off (and landing). Anti-collision, navigation and strobe lamps should be used in accordance with night operational requirements. Instrument panel lighting must be on and dimmed to an appropriate level.

Use the pitot heat (where fitted) either before or during flight as required to ensure the pitot remains clear of ice.

4.8 Take-off Procedure

- Check relative wind
- With right hand, maintain control stick in a forward position
- Switch pneumatic mode selector to FLIGHT and return to brake with left hand
- Hold wheel brake without having locking pawl engaged
- While holding wheel brake adjust throttle to give 2000 RPM
- Activate and hold pre-rotator. To reduce lateral stick force during pre-rotation, adjust the forward stick position by pulling it slightly aft and to the right
- Let pneumatic clutch fully engage (stabilization at about 100 rotor RPM).
  If necessary release pre-rotator button momentarily and press again to maintain engine RPM within green arc, respectively to prevent engine from stalling!
- Carefully increase throttle to increase rotor rpm to that required for the take-off. Minimum rotor rpm for take-off is 200, maximum achievable is 320. Between 280 and 320rpm it is possible that the high engine rpm and resultant propeller static thrust generated may be causing the aircraft to slide with wheels locked – depending on the runway surface and payload. If sliding starts reduce power! If the rpm is not sufficient for take-off, abort and restart as required.
- In case of a slipping clutch (CLUTCH light ON), reduce power and match engine rpm to rotor rpm.
- When the minimum of 200 or higher desired rotor rpm is reached, release pre-rotator button.
- Gently - but smartly – move control stick fully aft (stick travel ~ 1 sec.), see 4.9.
  In a strong headwind be prepared to stop movement before nose wheel rises!
- Release wheel brake with throttle unchanged
- Monitor rotor speed and adequately increase throttle to take-off power
- If the CLUTCH light is flashing, check that the rotor rpm is above the 200 minimum requirement and if below, abort the take-off run (by closing the throttle. Brakes should be used with caution)

WARNING

Before activating the pre-rotator, check area is clear and ensure that the passenger's hair or loose garment cannot be caught in the pre-rotator drive shaft (where exposed).

WARNING

Prior to releasing the wheel brake, make sure that the control stick is sufficiently aft. A take-off run with flat rotor system may cause a very serious accident.

WARNING

The 915iS and 916iS engines generate high thrust loads, meaning fast acceleration and rapid take-off.

Take off with low rotor rpm and high thrust WILL result in blade flap!

Take care to understand and manage the high power available!

WARNING

If the rotor speed has decayed to below the green arc, then ground speed must be built-up very carefully to increase rotor speed. Take care! Slow rotors can stall and flap, causing expensive aircraft damage! If in doubt, abort the take-off run and restart.

Warning

In the event of pre-rotator failure, STOP and rectify the fault. Do NOT attempt to pre-spin by hand, as this involves considerable personal risk if the engine is running.

CAUTION

Do not engage pre-rotator at too high engine RPM or until too high rotor RPM as this will lead to pre-rotator drive damage.

CAUTION

Avoid overtorquing of the pre-rotator drive! Overtorquing will occur if RPM/power is fed excessively or abruptly. In case of stalling the engine, release pre-rotator button temporarily. Do not yank the throttle control while the clutch is engaged!

CAUTION

Do not try to pull the stick back with the pre rotator engaged and under load. The drive torque will prevent the system sliding joints from moving, resulting in damage to the drive system.

NOTE

Perform take-off into the wind and with least possible crosswind component.

NOTE

To avoid unintended engagement in flight the pre-rotator can only be activated with the control stick in its forward position.

4.9 Take-off Run

- Check engine has reached full power for take-off. Otherwise, abort take-off
- Commencing the take-off run with high rotor rpm (280-320) and the stick fully back means that there is a high starting drag load. The aircraft has to accelerate to approx. 50mph (80kmh, 45KIAS) (depending on loading) to take off, and achieve the rotor rpm for the loading conditions.
  Therefore, to minimise the drag and enable maximum acceleration at high rotor rpm, move the stick forwards to approximately the mid position as the aircraft starts to move. Monitor rotor rpm carefully ensuring that it is increasing, if the stick is too far forwards the rotor rpm will decay, and a serious accident can be caused!
- When the nose comes up allow nose wheel to float at about 10 – 15 cm above the runway by a balanced change of control stick position
- Minimize lateral drift by applying appropriate lateral control stick input into cross wind direction
- Maintain directional control i.e. runway alignment with sensitive pedal input
- Maintain attitude until speed increases and gyroplane lifts off (at about 80kmh (50mph, 45KIAS) depending on loading and rotor)
- Allow gyroplane to build-up speed in ground effect

CSP/VPP: With a variable pitch propeller installed, refer to the respective flight manual supplement in CHAPTER 9 for correct power setting and handling procedure. The automatic control version needs no pilot input.

WARNING

Gyroplanes are fully controllable at very low speeds without exhibiting any signs of wing stall or soft flight controls, as it would be perceived in a fixed wing aircraft. However, operation 'behind the power curve' may have fatal consequences during take-off, initial climb or in any other situation within close ground proximity. Always achieve a safe climb speed before starting to climb away.

4.10 Climb

- Perform initial climb at safe climb speed and adjust trim
- Set power to maximum take-off power

Caution

Full take off power will require right rudder input to counteract the high thrust and torque load.

- Check engine instruments and respect maximum take-off power time limit
- Switch off second fuel pump at safe height
- At safe altitude, the climb may be continued with V_Y and reduced power setting for noise abatement
- When desired altitude is approached, level gyroplane and reduce power

  CSP/VPP: With a variable pitch propeller installed, refer to the respective flight manual supplement in CHAPTER 9 for correct power setting and handling procedure.

  If flying at night, switch off the landing lights. Adjust cabin instrument light brightness to suit ambient lighting levels.

4.11 Cruise

- Adjust power setting within the maximum continuous power range
- Adjust trim

  CSP/VPP: With a variable pitch propeller installed, refer to the respective flight manual supplement in CHAPTER 9 for correct power setting and handling procedure.

4.12 Descent

- Reduce power setting and lower nose
- Adjust trim

  CSP/VPP: With a variable pitch propeller installed, refer to the respective flight manual supplement in CHAPTER 9 for correct power setting and handling procedure.

4.13 Approach

- Switch ON second fuel pump P2
- Set variable pitch propeller (if installed) to FINE (MAX RPM)
- Check all warning and caution indications OFF
- Check all instruments in normal operating range
- Check wheel brake unlocked
- Maintain and trim approach speed
- Control glide angle with engine power
- If at night, turn the landing lights on. Always turn on both landing lamps in case of failure.
- If at night, and it is safe to do so, approach at 115km/h (70mph, 60KIAS). The increase in rotor speed will allow a longer, flatter flare and landing.

WARNING

An approach within the gliding distance to the airport or landing site is generally considered to be the safest option.

CAUTION

In the event of a full landing light failure at night, perform a power on, shallow approach as above into a lit airstrip to enable an immediate go-around if a safe landing is not practical.

4.14 Landing

- Align gyroplane with rudder and correct drift with lateral control input, even if this results in a side slip indication
- Maintain approach speed until approximately 15ft (5m) above runway
- Initiate round out to reduce sink rate and let ground approach
- Perform final flare close to ground as speed will decay rapidly
- Let gyroplane settle on main gear with nose wheel slightly above the ground
- Hold nose wheel closely above ground and let it sit down with pedals neutral at the lowest possible ground speed
- Maintain aft control stick to reduce speed until walking speed. Wheel brake may be used to assist, if needed

CAUTION

Touching down with the nose wheel pointing left or right, and with a run-on speed, will cause the wheel to 'grab' in that direction. If left uncorrected the aircraft will try to turn in that direction, possibly resulting in a roll-over. Always lower the nose at low ground speed, with the nose wheel straight.

CAUTION

When landing in a strong headwind do not use wheel brake to prevent gyroplane from rollback. In order to compensate for any rollback tendency, flatten rotor disc as required and increase propeller thrust as required.

4.15 Go-around

- Apply take-off power. Counteract yaw tendency and align gyroplane with rudder input.
- In horizontal flight, allow gyroplane to gain speed
- Climb with safe or best rate of climb speed and adjust trim

CSP/VPP: With a variable pitch propeller installed, refer to the respective flight manual supplement in CHAPTER 9 for correct power setting and handling procedure.

4.16 After Landing

- As soon as the rotor starts slowing down, and when the speed is no less than 300rpm, put the control stick full forward to level-off the rotor disc. Do not wait for the rotor to slow down with the stick backwards, otherwise you may suffer a rotor strike to the tail! Be prepared for the resultant reduced rotor drag!
- Use lateral control into wind to maintain rotor disc in level attitude. Adjust lateral control input as rotor speed decays
- Bring pneumatic mode selector to BRAKE position and return to wheel brake with left hand
- Apply full rotor brake pressure by using AFT TRIM. Monitor pressure gauge. Adjust brake effectiveness by varying forward stick pressure, and park rotors in line with the aircraft axis.
- Taxi carefully, preferably not above walking speed and mind high centre of gravity when taking turns
- Turn off the underbody landing light (where fitted and if used) when practical to reduce electrical current draw.
- Do not vacate gyroplane until engine and rotor is at a complete stop

WARNING

Mind the spinning rotor and propeller when taxiing close to obstructions or persons. A fast turning rotor or propeller is almost invisible, but contains enough energy to cause significant and serious injury, or substantial damage to the aircraft or other structure.

CAUTION

Try to park the blades fore/aft of the aircraft, to avoid high stick loads in roll when taxying. Depress the pre rotator interlock release (OVERDRIVE) button & engage the pre-rotator to wind the rotor into the desired position. The use of abrupt pedal inputs to do this during taxiing should be avoided.

NOTE

It is advisable to let the rotor spin down while the gyroplane is at a complete stop. However, in order to vacate the runway, it is possible to taxi while the rotor is spinning down. In this case, be aware of the effects of relative wind on advancing and retreating blade, compensate with lateral control input, and adjust taxi speed carefully as to avoid blade flapping.

4.17 Engine Shut-down

Throttle ..... Idle
Parking brake ..... Set
Engine cool-down ..... Perform

Turbo charger cool-down at 2000rpm ..... min. 2mins
Second fuel pump (if installed) ..... OFF
Avionics/Radio/Intercom/Lights (except ACL / Strobe) ..... OFF
Both LANE switches sequentially ..... OFF
ACL / Strobe, navigation and landing lights (if installed) ..... OFF
Master switch ..... OFF and key removed

NOTE

Normally the cooling down of the engine during descent and taxi will be sufficient to allow the engine to be shut off as soon as the aircraft is stopped. At increased operating temperatures make an engine cooling run of at least 2 minutes.

Always comply with the cool-down recommendations in the ROTAX engine operator's manual.

4.18 Parking

- Install rotor tie-down bag
- Secure gyroplane against rolling using parking brake and chocks, if parked on a slope
- Double check to have master switched OFF and keys removed
- Install protection cover if available or appropriate

NOTE

Avoid long term parking of the aircraft with empty tanks. This will increase the risk of water accumulation in the tanks and will lead to shrinking of the rubber tank seals.

4.19 Special Procedure: Short Field Take-off

A short field take-off with high pre-rotation speed puts high loads on pre-rotator and rotor and requires a modified procedure. As a consequence, short field take-offs with high pre-rotation shall only be performed after adequate training and only when necessary.

- Perform normal take-off procedure until clutch is fully engaged
- Carefully increase engine power to maximum, which will give up to 320 rotor RPM depending the aircraft loading (at light loading the aircraft may slide forwards with the wheel brakes locked)
  In case of a slipping clutch (CLUTCH light), reduce power to match engine to rotor speed
- With the stick moved slightly aft (which will disengage the pre-rotator), release the wheel brake without reducing engine power
- As the aircraft accelerates, move the stick further aft to allow the rotor RPM to increase. Do not let the rpm decrease!

- Allow gyroplane to lift off and gain speed
- V_Y climb with no side slip

4.20 Special Procedure: Slow Speed Sink and Recovery

- Reduce power to idle and let speed decrease by gently using aft control stick
- Maintain enough forward speed for sufficient rudder effectivity
- Rudder will regain effectivity quickly as soon as airspeed or propeller thrust is increased
- To recover, let nose drop slightly below the horizon and build-up air speed while adding power at the same time

4.21 Flight under Conditions of Precipitation

The flight through areas of precipitation can be challenging for pilots. Rain or other precipitation can have a negative effect on flight performance of the gyroplane; flight characteristics can be slightly or in extreme situations drastically affected by rainfall. In particular the following must be expected:

- Reduction in, or loss of sight due to wet and / or misted wind shield
- Failure or faulty operation of avionics and instrumentation (eg water in the pitot tube)
- Pilot disorientation (especially in snow)
- Increased wear and tear of some gyroplane components (mainly of the propeller)
- Change of aircraft aerodynamics (mainly under freezing rain)
- Small reduction in performance due to wet rotors.

Avoidance of precipitation conditions should be taken into consideration during flight planning. Should areas of precipitation be entered despite correct flight planning, react, if necessary, according to chapter 3 “Emergency Procedures”.

WARNING

Precipitation is a risk that can be minimized by proper flight planning. Flight through areas of precipitation should be avoided.

4.22 Engine In-flight Shut-down and Air Restart

The engine should not be stopped in flight deliberately except as part of forced landing training under the supervision of a qualified flight instructor. If possible, allow the engine to cool down at 3000 RPM for about 30 sec before turning it off. This helps limit coking in the turbocharger oil lines.

Make sure that the master switch/starter key has been turned to OFF and back to ON and that both LANE switches are switched back ON with LANE LED’s lit, such that the aircraft is prepared for an immediate engine start-up in case the manoeuvre has to be aborted.

NOTE

Be aware of reduced rudder effectiveness (and increased drag/sink rate) with a stationary propeller, due to the reduced airflow over the rudder surface. Be prepared to use larger pedal input and more left pedal than usual to keep gyroplane aligned. Increase airspeed as required to maintain control.

After a restart, allow engine and oil to warm-up, if possible, before applying full power.

4.23 Noise Abatement

A positive attitude towards residents and environmental-friendly flying supports the reputation and acceptance of aviation in general, and gyroplanes in particular. When compared to other airplanes the noise of a gyroplane is sometimes perceived as unpleasant although it meets the same or sometimes more stringent noise emission requirements. This effect can be attributed to the pusher concept where the propeller is exposed to air flow which was distorted by the fuselage. The degree of distortion, and therefore the noise emission of the propeller, is significantly lower at reduced speeds. The best practices to keep noise level low and general acceptance high are:

- Climb with the speed for best rate of climb V_Y as soon as altitude permits
- Especially in climb keep side slip to a minimum to establish a clean configuration. In addition, this guarantees the best climb performance
- For your own safety always maintain safe altitude and avoid unnecessary ‘low-flying’
- When overflying populated areas, look ahead and select the least noise sensitive route
- Repetitive noise is far more irritating than a single occurrence. If you must fly over the same area more than once, vary your flight path
- Avoid blade slap (wop-wop noise). Blade slap can occur as a result of inadequate piloting technique or during aggressive manoeuvres, but will not appear in normal flight regime

NOTE

Above procedures do not apply where they would conflict with Air Traffic Control, within the traffic pattern, or when, according to pilot’s judgement, they would result in an unsafe flight path.

INTENTIONALLY LEFT BLANK

CONTENTS

5.1 Demonstrated Operating Temperature 5-1
5.2 Airspeed Correction 5-1
5.3 Height-Velocity Diagram 5-2
5.4 Speeds 5-3
5.5 Rate of Climb 5-3
5.6 Take-off and Landing Data 5-4
5.7 Influence on Take-off Distance and Climb Rate 5-5
5.8 Sink Rate and Glide Ratio 5-7
5.9 Additional Performance Data 5-7
5.9.1 Fuel Flow 5-7
5.9.2 Service Ceiling 5-7
5.10 Effect of Rain and Dirt 5-8
5.11 Sound Exposure Level / Noise Characteristics 5-8
5.12 High Altitude Operation 5-8

INTENTIONALLY LEFT BLANK

SECTION 5 - PERFORMANCE

The following data were determined by flight testing and demonstrated with average piloting skills, with engine and aircraft in good condition, as well as clean main rotor and propeller. The parameters apply to standard conditions (15 °C (60°F) at sea level and standard pressure) and a gross mass of 560 kg.

Note that a higher airfield elevation, increased temperature, or low air pressure will have a negative effect on performance.

5.1 Demonstrated Operating Temperature

Satisfactory engine cooling has been demonstrated at outside air temperatures up to 40°C (104°F).

5.2 Airspeed Correction

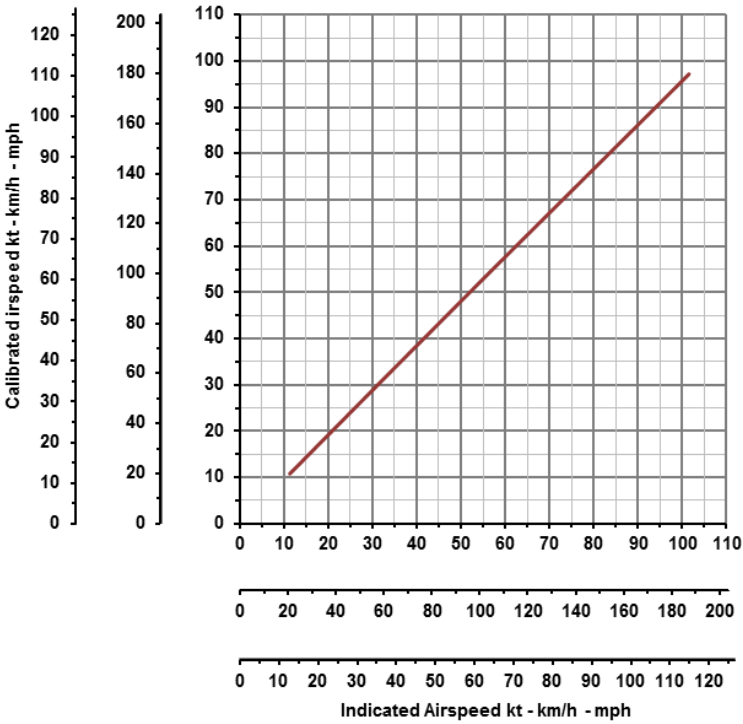

Example: Indicated airspeed of 140 km/h (87mph, 76KIAS) represents a calibrated airspeed (corrected for installation error) of 134 km/h (86mph, 74.5KIAS).

5.3 Height-Velocity Diagram

The H/V diagram indicates combinations of height and speed (avoid area left side of the red graph) where a safe landing may not be possible in case of an engine failure. Therefore, operation on the left side of the red line must be avoided.

Take-offs and landings should be conducted according to the recommended flight profile, provided as blue dashed line.

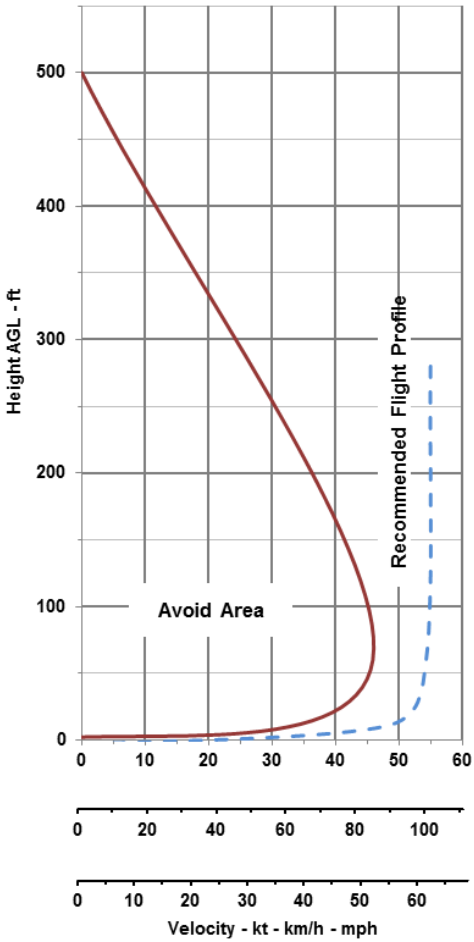

5.4 Speeds

The following speeds are relevant for controllability. Safe operational speeds and limitations are provided in SECTION 2 Limitations of this manual.

V_{min}, TOP * 560Kg TOW.....25 km/h (20mph, 15KIAS) IAS
Speed for best angle of climb V_X.....105 km/h (65mph, 57KIAS) IAS
Speed for best rate of climb or maximum endurance V_Y110 km/h (68mph, 60KIAS)
Best range speed .....116 km/h (72mph, 60KIAS) IAS
Long range speed** .....120 km/h (75mph, 65KIAS) IAS
Approach speed***.....100 km/h (60mph, 50KIAS) IAS
V_{mc} power-off**** .....32 km/h (20mph, 15KIAS) IAS
V_{mc} power on**** .....0 km/h (0mph, 0KIAS) IAS

WARNING

*** Take care! A full power operation at V_{min} with a Rotax 915iS or 916iS engine will result in a very high nose-up attitude with little forward visibility, and very little airspeed. Airspeed indication below 25km/h (20mph, 15KIAS) is unreliable. Further, rotor rpm will be reduced due to the aircraft being partially supported on engine thrust.**

ROTOR RPM MUST BE MAINTAINED ABOVE 300!

Take great care, especially when flying at light weight, to maintain rotor rpm.

** Long range speed is the speed faster than the best range speed which results in a slightly lesser range but represents a good compromise between range and saved air time.

*** Approach speed above 100kmh (60mph, 50KIAS) builds energy in the rotor that results in a long floating landing. Approach speed at 80kmh (50mph, 40KIAS) results in a very short landing roll, and below 80kmh requires increasing skill especially at max TOW.

****V_{mc} is the minimum controllability speed. At 30kmh (20mph, 15KIAS) or below, engine off, rudder authority reduces, to negligible below 15kmh (10mph, 8KIAS).

TOP is Take-Off Power.

5.5 Rate of Climb[1]

Rate of climb 915iS, 560 kg, V_Y, TOP .....4.8 m/s (945fpm)
Rate of climb 916iS, 560 kg, V_Y, TOP .....6.0 m/s (1170fpm)

[1] Rate of Climb values were identified within noise measurement according to German regulations and may differ from the listed values depending on engine and propeller type.

5.6 Take-off and Landing Data

Take-offs and landings have been demonstrated up to a crosswind component of 40km/h (25mph, 22KIAS).

As an additional information the following data is valid for operation of an MTO Sport 2017 equipped with an ROTAX 9xx iS engine, at a gross mass of 560 kg at an even air strip with short grass,, and pre-rotation to 300 RPM. Take-off distances are to clear a 15 m obstacle

915iS

Take-off roll ..... 80 –120 m
Take-off distance, 560kg, HTC Prop..... 300 m
Take-off distance, 560kg, Woodcomp Prop..... 260 m

916iS

Take-off roll ..... 80 –120 m
Take-off distance, 560kg, Woodcomp Prop..... 250 m

These distances depend on the aircraft take-off weight and environmental conditions. Reduced weight reduces take-off distance, and the environmental effects are shown in the 2.2 paragraph. Wet grass or boggy conditions will significantly increase these distances

Landing roll..... 0 – 20 m
Landing distance ..... 150 m

5.7 Influence on Take-off Distance and Climb Rate

All flight performance figures presented in this chapter are based on standard atmospheric conditions in sea level. Depending on actual temperature and pressure altitude (elevation) factors on take-off distance and climb rate can be deduced from the following chart.

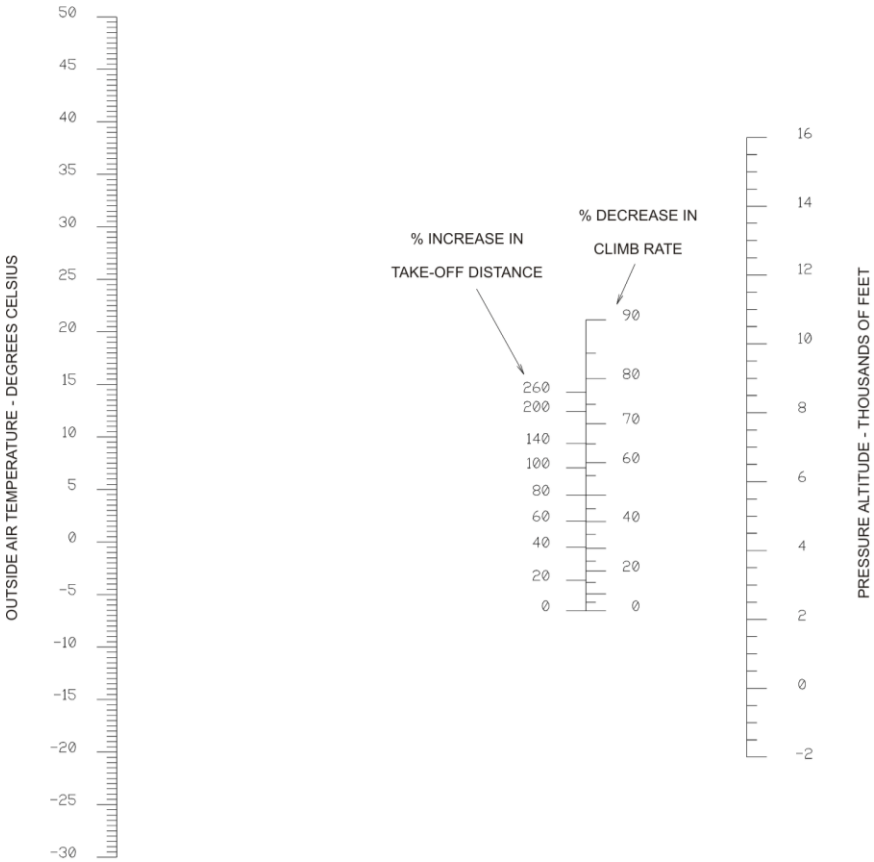

See next page for example.

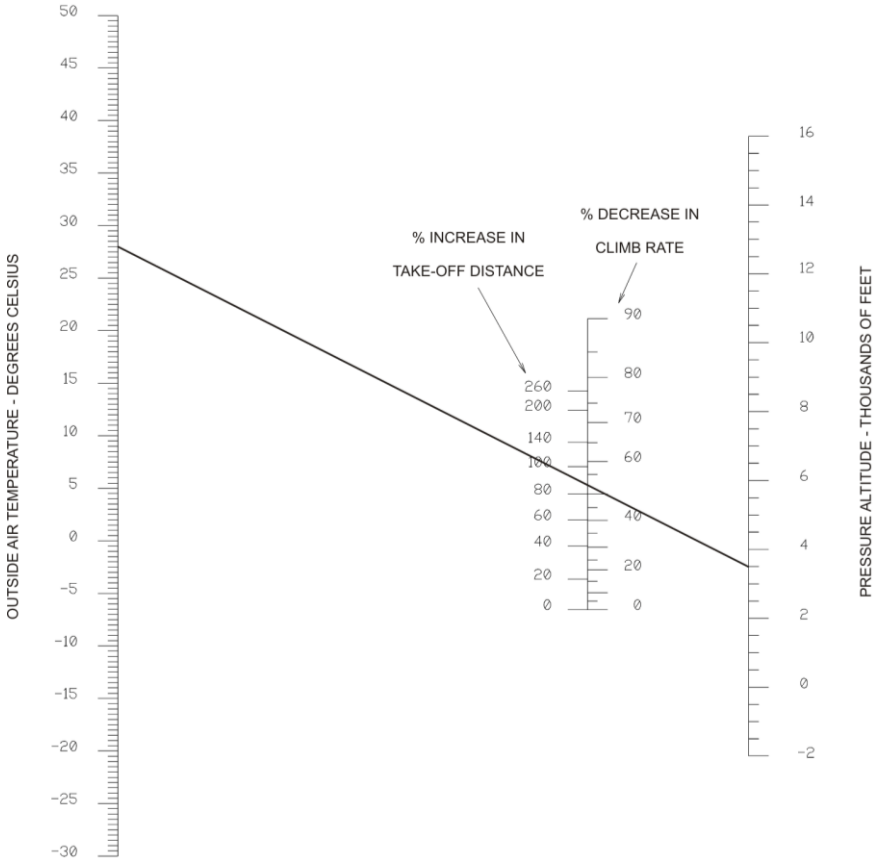

Example:

Given: Outside Air Temperature 28 °C and Pressure Altitude 3500 ft

Result: 88 % increase in take-off distance and climb rate reduced by 53 %

5.8 Sink Rate and Glide Ratio

The sink rate depending on airspeed with the engine in idle is plotted in the following diagram:

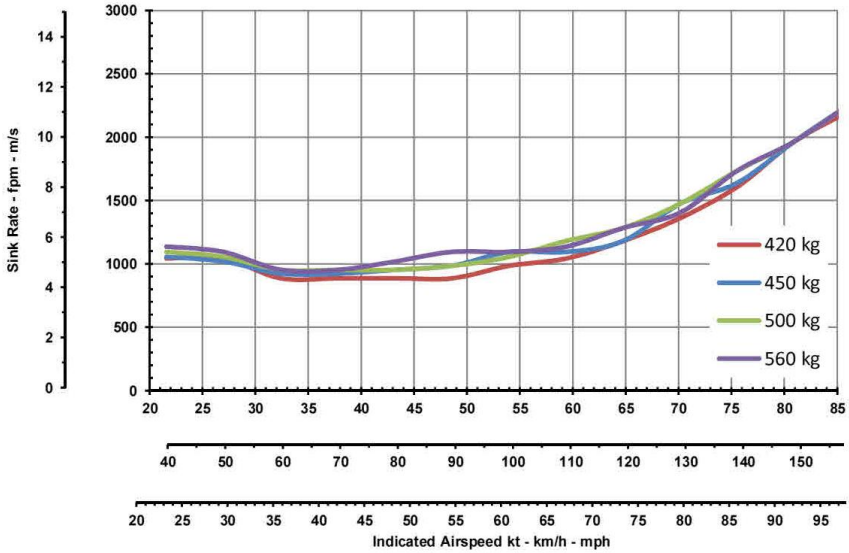

In case of an engine failure, expect a glide ratio of 1:3 which corresponds to a 3000ft (900m, 0.5 nautical mile) horizontal range for a 1000ft vertical descent.

5.9 Additional Performance Data

5.9.1 Fuel Flow

The following fuel flow figures are provided as estimates and do not constitute certified performance. Exact fuel flow will vary with environmental conditions, cleanliness of propeller and rotor, piloting technique (minimum side slip), and power setting. A fuel flow meter is installed in the aircraft to enable accurate data for the operator. Be aware that this indication data is provided by the Rotax engine management CAN-Bus system, not by a flow meter.

For additional procedures about proper power setting consult SECTION 9 for supplemental data concerning the variable pitch propeller, if installed.

Fuel flow at 125kmh (78mph, 68KIAS) ..... 15 ltr/h
Fuel flow at 140kmh (87mph, 75KIAS) ..... 18 ltr/h

5.9.2 Service Ceiling

See SECTION 2 LIMITATIONS

5.10 Effect of Rain and Dirt

During flight test it was noted that the take-off and climb performance in rain was marginally reduced. Expect up to a 5% reduction in performance.

The most noted effect of rain on take-off is the presence of rain drops over the front windshield, leading to a partially obscured view. It is highly recommended if operating in wet conditions that the screen is kept very clean, such that rain tends to run off. If practical, wipe before take-off commences. As airspeed increases the rain runs off either side of the screen.

Dirty blades have a significant effect on performance, in both the increase of out of balance forces (stick vibration), and reduction in lift. It is not practical to define a specific performance loss versus level of insect accretion or dirt level – blades should always be cleaned prior to flight, this activity takes only a couple of minutes. Proprietary baby wipes make an excellent field cleaner for rotor blades.

Dirty blades can lead to a 20% performance loss.

5.11 Sound Exposure Level / Noise Characteristics

The noise certificate was granted according to the German requirements for noise protection for microlight gyroplanes (“Lärmschutzverordnung für Ultraleichte Tragschrauber”) stating an overfly noise of 64 dB or less.

5.12 High Altitude Operation

The reducing air density climbing to this altitude means that the engine will be prone to over revving. Throttle back, or increase propeller pitch (where a variable pitch propeller is fitted)

Rotor rpm will rise by approximately 90rpm. This will increase disc inertia, and may affect the rotor vibration. The rpm will easily rise above this value at V_{ne} or in turns. Ensure the rpm remains within gauge limits.

Engine oil or coolant systems may be compromised by the lack of air density to remove the heat. Ensure T’s and P’s remain within limits.

Ensure the aircraft remains within the handbook operating temperature limits; ISA standard is approx. -13°C (8.5°F) , the aircraft is approved to -20°C (-4°F).

Ensure occupants are properly equipped for operation at this altitude – especially for the low temperature, and for the lack of oxygen.

INTENTIONALLY LEFT BLANK

CONTENTS

6.1 General 6-1
6.2 Weight and Balance Record 6-1
6.3 Compliance with Weight and Balance 6-1

INTENTIONALLY LEFT BLANK

SECTION 6 - WEIGHT AND BALANCE

6.1 General

The gyroplane must be operated within the weight and balance limits as specified in SECTION 2 of this manual. Loading situations outside these limits can result in restricted flight control and can ultimately lead to degraded safety.

6.2 Weight and Balance Record

An initial weighing report and equipment list showing gyroplane configuration, empty weight and centre of gravity is delivered with each gyroplane. This data applies to the gyroplane as delivered from the factory. Any changes in the configuration should be performed by a qualified maintenance station and documented. After modifications and at regular intervals a new weighing report and equipment list should be issued.

6.3 Compliance with Weight and Balance

The MTOsport 2017 model is designed in such way that compliance with weight and balance is provided, if:

- the gyroplane is loaded within the individual weight limitations for each station as provided in SECTION 2 of this manual
- the certified maximum take-off weight, representing the total sum of pilot, passenger, baggage, fuel and current empty weight is not exceeded

INTENTIONALLY LEFT BLANK

CONTENTS

7.1 Introduction 7-1
7.2 Airframe and Undercarriage 7-1
7.3 Doors, Windows and Exits 7-1
7.4 Fuel System 7-1
7.5 Pneumatic System 7-3
7.6 Power Plant 7-4
7.7 Propeller 7-5
7.8 Rotor System (TOPP) 7-5
7.9 Flight Controls 7-5
7.10 Electrical System 7-8
7.11 Lighting System 7-9
7.12 Electrical circuit protection 7-9
7.13 Avionics 7-10
7.14 Instrument Panel 7-10
7.15 Intercom 7-26
7.16 Pitot Static 7-26
7.17 Indicators and Sensors 7-26
7.18 Seats and Seatbelts 7-26
7.19 Stowage Capacity 7-27

INTENTIONALLY LEFT BLANK

SECTION 7 - SYSTEM DESCRIPTION

7.1 Introduction

This section contains the description of the gyroplane and its standard systems and equipment. Optional equipment is described in Chapter 9 of this manual.

7.2 Airframe and Undercarriage

The load carrying structure of the gyroplane consists of an inert-gas welded stainless steel square tube framework and includes mast, forward extension, and aft extension. The main frame carries all loads induced by the crew stations, engine, rotor, undercarriage, stabilizer, and serves as installation platform for additional equipment.

The fuselage is made of carbon fibre reinforced plastic. It is mounted to the forward extension of the main frame and is not designed as a load carrying (primary) structure.

Stabilizer structure with rudder is made of carbon fibre reinforced plastic (CRP) and is bolted to the aft extension of the main frame. Attachment points for the engine installation are provided by a steel tube ring mount at the rear of the mast. The mast also supports the rotor at its top end.

The landing gear consists of a steerable nose wheel in a steel fork and two main wheels with hydraulic brake system. Both main wheels can be equipped with wheel spats made from GRP and are mounted to the ends of the spring spar, which is made from GRP. The spar is designed to absorb even higher than normal landing loads in case of a hard landing or crash. The spring spar is bolted to a support frame at the bottom of the mast and main frame.

7.3 Doors, Windows and Exits

This gyroplane is designed as an open cockpit aircraft and features no doors. Two windshields manufactured from break-proof polycarbonate protect the crew against the air stream, insects, and direct rain. Access and exit is provided over the sill-board on the right hand side.

7.4 Fuel System

Two fuel tanks are located under the rear seat and have a total capacity of 94 litres. Tanks are made from PE plastic and feature a ventilation line that is routed under the aircraft body. A drain valve is available in the bottom aft area of each tank that accepts a standard drain tool with pin to open the valve.

A large crossover port connects both tanks to ensure quick equalization.

The gascolator drains through on the right side, near the suspension bow, allowing easy access for drainage. Always close properly after inspection!

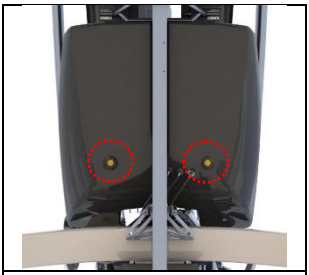

Drain Valve

An electronic fuel level gauge with integrated and independent low fuel sensor, or in later versions, an optical sensor at the lower rear of the left tank is provided in the cockpit. The LOW FUEL warning light is triggered as soon as 7.5 litres or less of usable fuel remain in the tanks. On ground, fuel quantity can be determined by a transparent line positioned at the rear end of the tanks.

All fuel hoses are made of fabric-reinforced rubber. The fuel system versions differ with engine model, see schematic below.

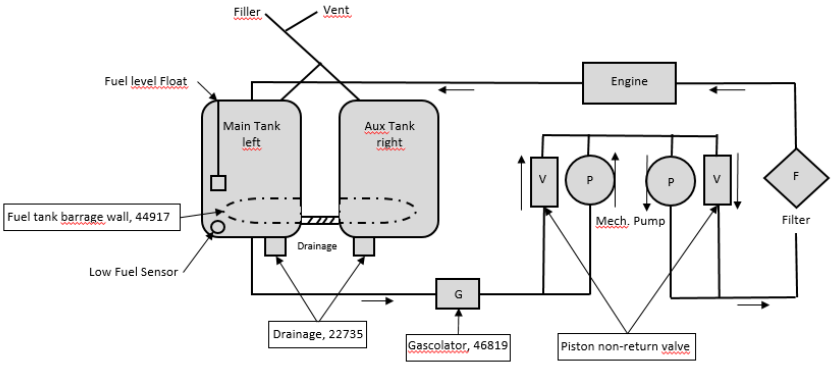

Location of gascolator drain point

7.5 Pneumatic System

Aircraft pitch and roll trim, rotor brake and activation of the pre-rotator is controlled by a pneumatic system, consisting of an electrically driven air compressor with filter/dryer, a pressure gauge in the cockpit, solenoid valves, air lines, pneumatic actuators, and the respective cockpit controls.

The system pressure is limited by a solenoid valve to around 8.5bar max. The pump will automatically shut off if this pressure is reached.

WARNING

The pneumatic system relies upon clean dry air to function properly. Failure to replace or dry the air dryer every 100hrs or annually may allow water into the system, reducing reliability and causing costly repairs.

Trim function

With the panel mounted FLIGHT/BRAKE selector switch in 'FLIGHT', pitch trim is affected by varying pressure in the upper portion of the pneumatic pitch trim actuator, located at the rear of the mast between the rotor head and mast. Pulling the stick top hat switch rearwards activates the electrical compressor for aft or nose-up trimming, and increases actuator cylinder pressure, causing the actuator to retract, and tilting the rotor disc aft. Pushing the top hat switch forwards for nose down trimming opens a pneumatic valve to reduce actuator cylinder pressure and allows the rotor disc to flatten, due to the spindle head offset and the gyroplane's weight. The actual trim cylinder pressure is indicated on the trim/brake pressure gauge in the centre panel of the cockpit.

Lateral/roll trim works similarly via the top hat switch, using a pneumatic double sided actuator located on the left side of the rotor head, between the head and the mast. Lateral trim condition is indicated by a LED bar on the instrument panel. The indicator shows the differential pressure between the two sides of the roll trim actuator.

Rotor brake

With the pneumatic FLIGHT/BRAKE mode selector in 'BRAKE' position the operation of the pneumatic trim actuator is reversed. Pulling the stick top hat switch rearwards starts the compressor and pumps air into the lower portion of the cylinder, driving the rotor brake pad up against the pre rotator ring gear, and in turn pushing the rotor head upwards and forwards. This pushes the forward ring gear against the front brake pad. The friction between the two pads and the ring gear slows the rotor.

At full brake pressure the control stick will be maintained in its full forward position.

By sensitive variation of stick forward pressure, brake effectiveness can be supported or reduced in order to park the rotor fore and aft.

It is normal for air to be gradually lost over time, a maximum of 0.5bar/hr can be expected. Use a tie-down bag to keep the rotor safe when parked.

Activation of the pre-rotator

The pre-rotator is actuated by depressing the control stick grip 'button' switch provided the following pre-conditions are met:

- pneumatic mode selector set to FLIGHT
- control stick in a forward position (a safety microswitch checks the stick position and prevents pre rotator operation if not sufficiently forwards)
- trim pressure less than 3 bar (safety cut-off switch)

Air is pumped to the pneumatic clutch, engaging the drive, and engine torque is transmitted through a 90° gearbox and drive shafts to the drive Bendix pinion. Air pressure within a small actuator also pushes this pinion upwards to engage with the ring gear. The drive pinion is sliding on a helical gear to provide automatic retraction in case of rotor RPM overrun, and also contains a sprag clutch.

When the grip button is released, air pressure is vented from the system, and the clutch disengages.

The pre rotator drives shafts feature sliding splined elements to accommodate drive shafts length changes due to rotor head and engine operational movement.

Activation of the pre-rotator in BRAKE position

The pre-rotator can be activated in BRAKE position to park the rotor blades fore-aft for taxi. To do so, the pre-rotator switch and the OVERDRIVE push button in the cockpit panel have to be pressed simultaneously. Avoid prolonged activation of the pre-rotator with rotor brake engaged. To relieve pressure on the forward brake, the stick can be pulled slightly to the rear.

7.6 Power Plant

Engine

The 915iS & 916iS engines are 4 cylinder, horizontally opposed, 4 stroke engines featuring

- Liquid cooled cylinder heads
- Ram air cooled cylinders
- Dry sump forced lubrication
- Dual breakerless capacitor discharge ignition
- Fuel injection
- Hydraulic tappets
- Electric starter
- Two Generators (Alternator)
- Reduction gearbox with integrated shock absorber and overload clutch

For technical details refer to the engine manufacturer's manual.

Oil system

The oil reservoir with dipstick is behind the aft seat and can be easily reached through an access door on the right hand side of the fuselage. The type of lubrication system requires a special procedure for accurate oil level checking and to prevent overfilling, which is described in SECTION 8 of this manual.

When the oil temperature reaches 90 °C the thermostat will open, allowing the oil to pass through the oil cooler matrix. Having been cooled, the oil then passes the same sensor, which will now indicate a lower temperature than 90 °C – subject to the incoming oil temp and OAT.

Do not attempt to block the oil cooler to increase the oil temperature, as this could cause overheating on a hot day. The oil reaches at least 90 °C before the oil can transit through the cooler.

Engine cooling

Engine cooling is provided by ram air cooled cylinders and liquid cooled cylinder heads. Therefore, engine coolant temperature (CT) indication in the cockpit corresponds to cylinder head temperature (CHT). The water cooling system comprises engine driven pump, radiator and an expansion tank with radiator cap and sight glass.

The radiator is mounted at the lower aft end of the engine, just before the propeller.

For the relevant checking and replenishing procedures, refer to SECTION 8 of this manual and also the engine manufacturer's manual.

7.7 Propeller

A four-bladed, fixed pitch propeller with aluminium hub is used as standard version for the 915iS engine. The propeller blades are made from composite material with a foam core. As an option on the 915iS engine version, and standard on the 916iS version, a variable pitch propeller is available which is described in SECTION 9 of this manual.

7.8 Rotor System (TOPP)

The two-bladed, semi-rigid, teetering rotor system comprises high-strength aluminium extruded rotor blades, a hub bar, and a common teeter hinge assembly.

The rotor blades feature an aerodynamic profile especially suitable for rotorcraft which, in combination with its relative centre of gravity, provides aerodynamic stability by eliminating negative blade pitching moments and flutter tendency. The hollow blade profile is sealed at both ends by plastic blade caps.

The aluminium rotor hub bar is pre-coned to the natural coning angle of the blades and connects the blades firmly to each side using 6 fitting bolts (9 bolts in earlier hub bars) and a clamping profile. In order to compensate for asymmetric air flow in forward flight the blades are free to teeter. The hinge assembly consists of teeter tower, teeter bolt and teeter block.

The teeter bolt runs in a long Teflon coated bushing in the teeter block (main bearing action), as well as two shorter bushings in the teeter tower (emergency bearing action). The main bearing action is supported by special grease which is applied through a grease nipple on top of the teeter block. Servicing is described in SECTION 8 of this manual.

7.9 Flight Controls

Rotor head and trim control

Pitch and roll of the gyroplane are controlled by tilting the complete rotor head by means of the control stick. Control input is transferred via torsion tube and linkage running below the seats to the base link and from there to the rotor head via two split control rods with ball ends.

The control stick head is ergonomically shaped to fit the pilot's right hand and features control buttons for radio transmission (1), a four-way trim function (2), and activation of the pre-rotator (3).

The trim control works as a classical 4-way beep switch. Pulling the beep switch back increases aft trim or nose-up tendency, while pushing the switch forward reduces back trim pressure, leading to a nose-down tendency. Roll trim is affected by pushing the trim switch to the respective side.

Because of a safety circuit, activation of the pre-rotator is only possible with the pneumatic mode selector in FLIGHT position and the control stick in a forward position. This prevents inadvertent activation of the pre-rotator during flight or in BRAKE mode.

The aft stick is held by means of 2 quick release pins and should be removed unless the seat is occupied by a qualified flight instructor.

Control stick head

1 – Radio transmission
2 – 4-way trim switch
3 – Pre-rotator

Rudder and front wheel control

The rudder is connected to the adjustable foot pedals with two push-pull control cables (which are routed through the horizontal frame), steel cables and two bell crank levers. Nose wheel steering is directly linked to pedal/rudder control input by the two bell crank levers and control rods. The pair of aft pedals is interconnected in parallel with the nose wheel control path.

Both pairs of pedals are individually adjustable to suit pilot's comfort. A shorter adjustment is achieved by pulling the handle which moves the pedals closer. Pulling the handle while pushing with both feet gently against the pedals allows longer adjustment.

Ensure the pedal assembly is properly locked after adjustment, as indicated by a definite and positive click.

The rudder is fitted with a trim tab. This is normally biased to the left, and may be adjusted by the operator to trim the aircraft for straight flight at a desired speed, feet off the pedals.

Pedals with adjustment

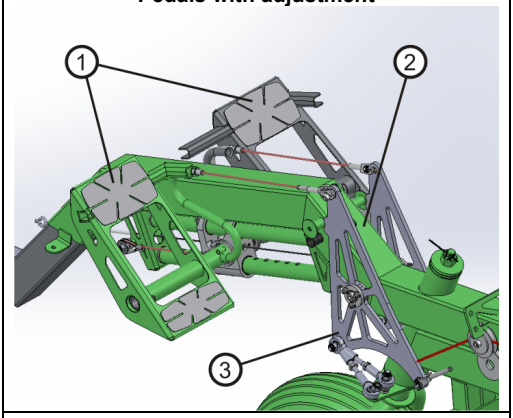

1 – Pedals
2 – Adjustment handle
3 – Nose wheel and rudder control

The rudder is additionally centred by return springs mounted under the tail. These align the rudder in the straight ahead position, such that should a cable fail – or the occupants be unable to control the rudder – then the aircraft will continue to fly reasonably straight.

The rudder is fitted with a trim tab.

This is normally biased to the left, and may be adjusted by the operator to trim the aircraft for straight flight at a desired speed, feet off the pedals. Adjusting it to the left will bias the rudder to the right and vice versa.

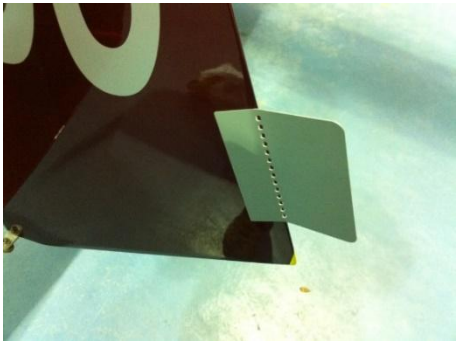

Throttle and brake quadrant

The throttle and brake quadrant is located on the left side of the pilot station. Throttle control (1) is conventional with IDLE in aft (or pulled) and full throttle in the most forward position. The throttle lever is linked with cable control to the engine. A mechanical spring applies tension to the control cables and brings the engine to full throttle in case of a cable break. The throttle lever has a pre-set friction brake which holds the throttle in the selected position.

The hydraulic wheel brake is actuated by pulling the brake lever (2). A locking pawl mechanism allows setting for use as parking brake. In order to release the parking brake pull the brake lever a little further to let the spring-loaded locking pawl disengage, and then release wheel brake.

Do not try to disengage the locking pawl by pressing the small release lever without pulling the brake lever at the same time. Releasing the pawl using the small release lever only will lead to premature deterioration of the teeth. If the teeth are worn the function of the parking brake will be compromised!

The throttle and brake quadrant also supports the brake fluid reservoir (4) with screw cap and fluid level minimum and maximum markings, as well as the primary brake cylinder (5).

Throttle and brake console

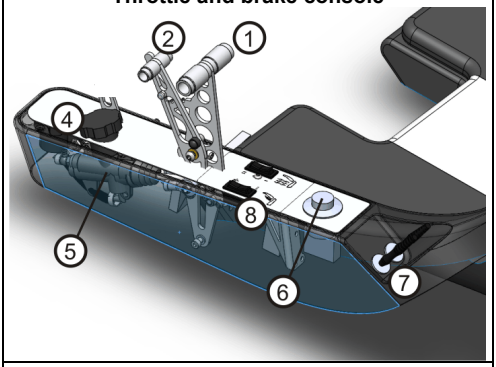

1 – Throttle lever
2 – Brake lever with locking pawl
4 – Brake fluid reservoir
5 – Primary brake cylinder
6 – Seat adjustment control push button
7 – Headset / helmet connectors
8 – Seat heating control (if installed)

7.10 Electrical System

The 12V DC electrical system consists of two engine driven electrical generators, a battery, master switch, indicators, switches, electrical consumers, and cabling. With the ROTAX 915iS and 916iS engines an electrical power supply is vital for continued engine operation as these engine variants solely rely on electrically driven fuel pumps and engine ECU. GEN1 is used by the engine only, GEN2 is used to supply the aircraft ancillary systems.

An additional, externally mounted 40A generator (Gen3) is optionally fitted for high electrical load operations.

Turning the master switch to the ON position closes the battery contact and energizes the gyroplane's electrical system. The amber LOW VOLT warning light will illuminate as a functional check. A steady indication, however, warns the pilot that the voltage of the system has dropped below a safe value. In this case a safety circuit (load shedding relay) will automatically disable the unnecessary systems (seat heating, 12V power receptacle, heating fan).

Amber Gen3 (where fitted) warning light is installed to indicate that the battery is not being charged by that generator.

Seat heating note (if installed)

The optional seat heat is activated by depressing the rocker switch between the seats to either (I) or (II) heat setting (with the switch centred for OFF). The heater element is self-regulating to that setting. The seat heating requires considerable energy, and is recommended to be left OFF (or at least reduced to heat setting (I)), once the cabin heater and cabin is up to temperature (around 5 minutes).

WARNING

High electrical load in flight with low engine rpm may reduce the ability of the charging circuit to replenish the battery, thereby reducing the battery reserve in the

NOTE

The seat heating elements will only work when the LOW VOLT warning LED is OFF, being automatically disconnected when the voltage falls below the LOW VOLT relay threshold

Illumination of the LOW VOLT warning lamp (alternatively seen within the Garmin G3x display electrical system page) demonstrates that the electrical system voltage has dropped below 12v, and, provided the charging circuit is working, that the electrical demand has exceeded supply. If lit, or intermittently lit, either reduce the electrical load or increase generator circuit output by increasing the engine rpm, as safe or appropriate to do, such that the lamp (or G3x indication) remains off.'

The power consumption of individual equipment is listed in the following table:

GEN1 is not listed because it only supplies engine systems.

Equipment / System	Power load
Internal generator (Gen2)	*(-) 420 W*
External generator (Gen3)	*(-) 600W*
Electrical fuel pump	41 W
Digital ALT and ASI	6 W / (20 W when charging backup batt.)
Pneumatic compressor	103 W / (280 W peak)
IVO propeller (if inst.)	30 W / (140 W peak)
NAV/Pos lights (LED)	8 W
Strobe lights	46 W
Landing light (LED)	36 W
Radio ATR833 (if inst.)	7 W (receive) / 39 W (transmit)
ATC Transp.TRT800H (if inst.)	max. 10 W
Aspen (if inst.)	65 W
Garmin 695 / 795 (if inst.)	40 W
Garmin area 500 (if inst.)	5 W (charging)
Garmin G3X (if inst.)	30 W
Dynon 10 (if inst.)	48 W
FlyMap L (if inst.)	35 W
FlyMap XL (if inst.)	46 W
Heated gloves (if conn.)	30 W
Heated pants (if conn.)	50 W
Heated jacket (if conn.)	88 W
Heated soles (if conn.)	17 W
Seat heating (if inst.)	100 W
Pitot heat	19W

7.11 Lighting System

All MTO Sport 2017 aircraft are approved for Day-FR operation. Those equipped with the necessary additional equipment are approved for Day-VFR and Night-VFR. Refer to SECTION 9 of this manual for description of External lighting.

7.12 Electrical circuit protection

Fuses together with their values and application are listed below:

Fuse / Name	Value	Application
F2 Gen. 3	5 A	Generator 3 (if installed)
F3 Compressor	15 A	Electric Compressor
F5 ECU	2 A	Engine Turbo Control Unit (if inst.)
F6 Cockpit	5 A	
F7 Avionic	10 A	
F8 ACL	10 A	Strobes

F9 Start	5 A	Engine Starter Relay
Line fuse/Taxi light	10 A	
Line fuse/Landing light	10 A	
F12 Prop.	15 A	Propeller Adjustment (if inst.)
F13 Trim.	3 A	Trim and Rotor Brake Control
F14 Sensor	3 A	
F15 Heater pilot	15 A	Seat Heating Front Seat (if inst.)
F16 Heater copilot	15 A	Seat Heating Rear Seat (if inst.)
F17 12 V plug	5 A	12 V Power Outlet
F18 Rear cockpit	10 A	

Note that the electric fuel pumps are supplied and fused via the engine management system.

7.13 Avionics

Radio

Option fit is the Funkwerk ATR833, MkI approval no EASA.21O.0193, MkII approval number EASA.210.10062108 for both external and internal communications. The wiring harness terminates in a standard jack plug type connection at each seat (additional LEMO plug may be fitted as an option), and the antenna may be mounted inside the nose, or underneath the enclosure. Ensure the headsets chosen function correctly before flight, and refer to the radio's User Manual.
The radio EASA approval numbers are, MkI approval no EASA.21O.0193, MkII approval number EASA.210.10062108.

Transponder

Option fit is a Funkwerk TRT800H Mode S transponder. The antenna protrudes under the body. Read the User Manual for operational instructions, and take care that the Mode S hexadecimal code and aircraft recognition data is correct!
The Funkwerk TRT 800H carries an EASA approval, approval no. EASA.210.269
Others may be fitted subject to local approval.

Alternate approved transponders:

TRIG TT22 Mode S Transponder and TN70 GPS module (provides ADSB out)

Garmin GTX 35R (fitted with a G3x installation)
Other Garmin or Trig radio and transponder devices as required to suit individual markets.

Remark; Depending on the market, a Radio Operators licence may be required to allow use of the radio, and a Radio Installation licence may be required for the radio and transponder (eg one combined licence, renewed annually).

7.14 Instrument Panel

Different instrument panel layouts are available. The basic instrumentation arrangements include:

- Standard Layout / Moving Map Portrait
- USA Primary Category and Section T approved display, day VFR
- USA Primary Category and Section T approved display, day and night VFR
- Glass Cockpit - Single Display
- Glass Cockpit - Dual Display

The standard layout includes all instruments necessary for flight but also installation provisions for additional conventional instrumentation.

The panel layouts Moving Map Landscape or Portrait include all relevant instruments arranged in a way to accept most off-the-shelf moving map navigation devices in the respective format. For detailed user information and instructions concerning the different moving map systems please refer to the manufacturer's documentation.

WARNING

All GPS and/or EFIS display units requires regular updating of the displays and potentially, the basic software itself. It is the operators' responsibility to ensure the equipment is correctly updated prior to flight, and to understand that the GPS system is NOT a primary navigational aid. The GPS system (or any other information displayed on the device) has not been approved to any airworthiness standard

NOTE

Any moving map system shall be used for reference only and does not replace proper flight planning and constant oversight and awareness.

The Glass Cockpit layout is tailored to the integrated flight and navigation suite of the Garmin G3X. In addition to navigational and moving map functions, the system provides primary flight data and engine/vehicle monitoring. It is of utmost importance to read and understand the operators' manual and to become familiar with the system before operation. In case of a system failure, a secondary altimeter, air speed indicator and compass are provided as back-up instrumentation.

If a single G3X glass cockpit with no alternate instrumentation is fitted, then a back-up battery be required to be installed, depending on the country certification requirements.

This delivers power to the following components for a determined time (approx. 45 minutes) when fully charged:

- Display (GDU)
- Airdata (GSU)
- Magnetometer (GMU)
- Engine data (GDA)

The avionic switch automatically switches the supply from the back-up battery to the components described. The back-up battery is therefore only active when the avionic switch is "ON". The % charge of the back-up battery is shown in the display.

A side-effect of the installation is that the Low Volt and Oil Pressure LEDs also illuminate when the Avionic switch is switched to the “ON” position (even with the key switch “OFF”).

Similarly, when a single Garmin G5 is fitted with no alternate instruments, then a G5 backup battery may be fitted.

Depending on the chosen instrumentation and optional equipment, the depicted panels on the following pages may vary.

Where a manual hydraulic constant propeller is fitted, this is controlled via blue control knob mounted on the instrument panel and suitably placarded.

CAUTION

Protect instrument panel against environmental influences! Especially wet conditions could result in damage to or destruction of components.

NOTE

The cockpit panel detail layouts may vary from those shown.

Each panel has an additional ‘Battery Backup’ switch, covered by a red flip-up cover. This is mounted adjacent to the lower switches. This is for emergency use in the event of a full alternator failure.

Example of panel from MTO Sport 2017 915iS/916iS with blue propeller control fitted

Panel Layout – GPS Panel

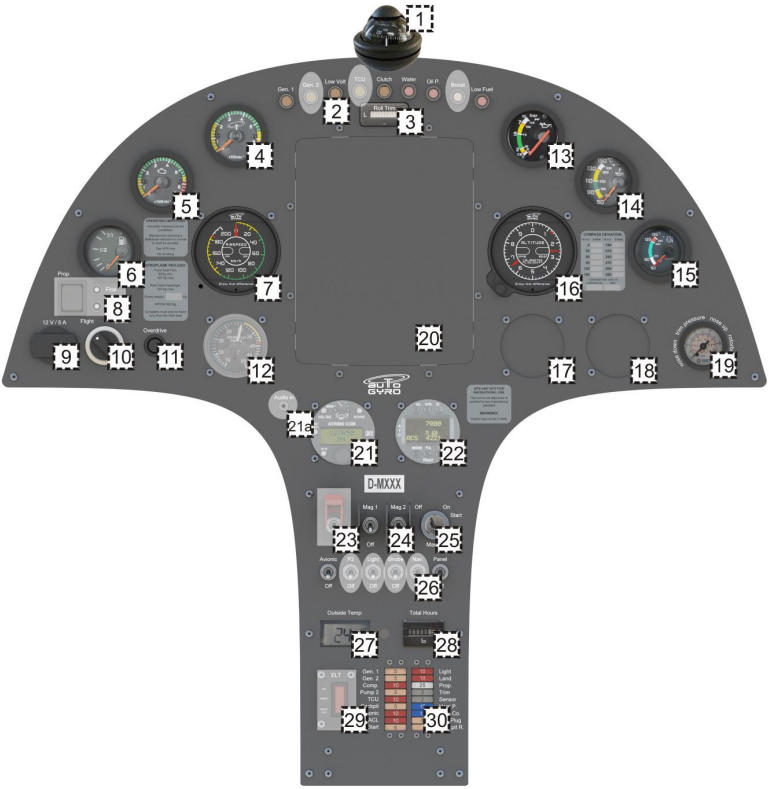

1 – Magnetic compass
2 – Warning lights
3 – Lateral/roll trim indicator
4 – Rotor RPM
5 – Engine RPM
6 – Fuel level indicator
7 – Air speed indicator
8 – Deleted
9 – 12V power receptacle (if installed)
10 – Pneumatic mode selector
11 – Pre-rotator overdrive
12 – Fuel Flow gauge
13 – Oil pressure
14 – Oil temperature
15 – Cylinder head temperature
16 – Altimeter
17 – Cut-out 57mm / 2 ¼” for optional inst.
18 – Cut-out 57mm / 2 ¼” for optional inst.
19 – Trim/brake pressure gauge
20 – Installation provisions
21 – Radio (if installed)
22 – ATC Transponder (if inst.)
23 – Deleted
24 – LANE switches
25 – Master/starter switch
26 – Switches (Avionics, P2, Lights, Opt.)
27 – Outside air temperature / OAT
28 – Hour meter
29 – ELT control (if inst.)
30 – Fuses

Panel Layout – GPS Rack for Garmin 695

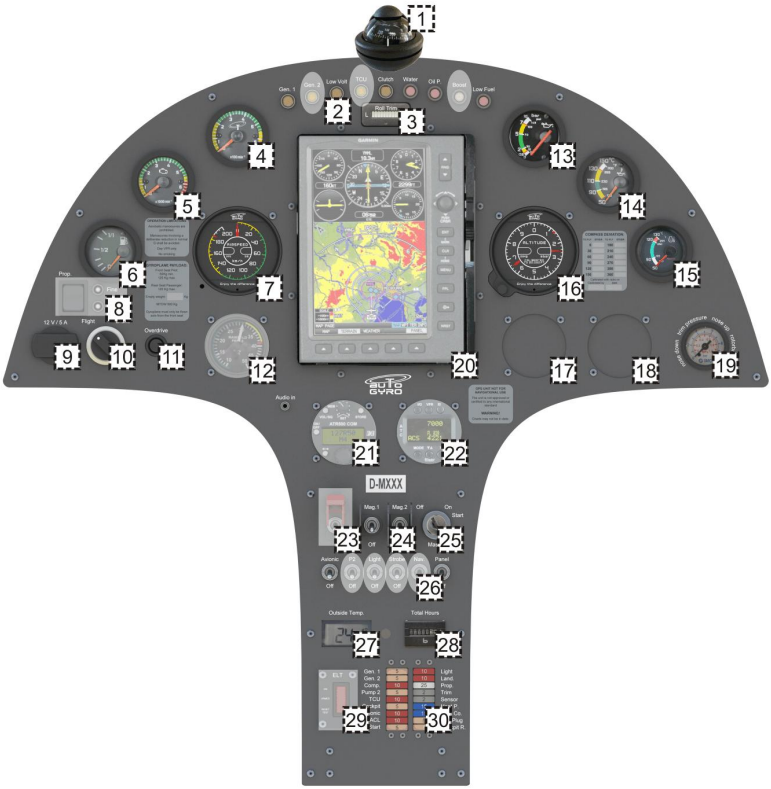

1 – Magnetic compass
2 – Warning lights
3 – Lateral/roll trim indicator
4 – Rotor RPM
5 – Engine RPM
6 – Fuel level indicator
7 – Air speed indicator
8 – Deleted
9 – 12V power receptacle (if installed)
10 – Pneumatic mode selector
11 – Pre-rotator overdrive
12 – Fuel Flow gauge
13 – Oil pressure
14 – Oil temperature
15 – Cylinder head temperature
16 – Altimeter
17 – Cut-out 57mm / 2 ¼” for optional inst.
18 – Cut-out 57mm / 2 ¼” for optional inst.
19 – Trim/brake pressure gauge
20 – Option GPS Rack for Garmin 695
21 – Radio (if installed)
22 – ATC Transponder (if inst.)
23 – Deleted
24 – LANE switches
25 – Master/starter switch
26 – Switches (Avionics, P2, Lights, Opt.)
27 – Outside air temperature / OAT
28 – Hour meter
29 – ELT control (if inst.)
30 – Fuses

Panel Layout – GPS Rack for Garmin 795

1 – Magnetic compass
2 – Warning lights
3 – Lateral/roll trim indicator
4 – Rotor RPM
5 – Engine RPM
6 – Fuel level indicator
7 – Air speed indicator
8 – Deleted
9 – 12V power receptacle (if installed)
10 – Pneumatic mode selector
11 – Pre-rotator overdrive
12 – Fuel Flow gauge
13 – Oil pressure
14 – Oil temperature
15 – Cylinder head temperature
16 – Altimeter
17 – Cut-out 57mm / 2 ¼” for optional inst.
18 – Cut-out 57mm / 2 ¼” for optional inst.
19 – Trim/brake pressure gauge
20 – Option GPS Rack for Garmin 795
21 – Radio (if installed)
22 – ATC Transponder (if inst.)
23 – Deleted
24 – LANE switches
25 – Master/starter switch
26 – Switches (Avionics, P2, Lights, Opt.)
27 – Outside air temperature / OAT
28 – Hour meter
29 – ELT control (if inst.)
30 – Fuses

Panel Layout – GPS Rack for I Pad mini 1,2,3

1 – Magnetic compass
2 – Warning lights
3 – Lateral/roll trim indicator
4 – Rotor RPM
5 – Engine RPM
6 – Fuel level indicator
7 – Air speed indicator
8 – Deleted
9 – 12V power receptacle (if installed)
10 – Pneumatic mode selector
11 – Pre-rotator overdrive
12 – Fuel Flow gauge
13 – Oil pressure
14 – Oil temperature
15 – Cylinder head temperature
16 – Altimeter
17 – Cut-out 57mm / 2 ¼” for optional inst.
18 – Cut-out 57mm / 2 ¼” for optional inst.
19 – Trim/brake pressure gauge
20 – Option GPS Rack for I Pad mini 1,2,3
21 – Radio (if installed)
22 – ATC Transponder (if inst.)
23 – Deleted
24 – LANE switches
25 – Master/starter switch
26 – Switches (Avionics, P2, Lights, Opt.)
27 – Outside air temperature / OAT
28 – Hour meter
29 – ELT control (if inst.)
30 – Fuses

Panel Layout – GPS Rack for I Pad mini 4

1 – Magnetic compass
2 – Warning lights
3 – Lateral/roll trim indicator
4 – Rotor RPM
5 – Engine RPM
6 – Fuel level indicator
7 – Air speed indicator
8 – Deleted
9 – 12V power receptacle (if installed)
10 – Pneumatic mode selector
11 – Pre-rotator overdrive
12 – Fuel Flow gauge
13 – Oil pressure
14 – Oil temperature
15 – Cylinder head temperature
16 – Altimeter
17 – Cut-out 57mm / 2 ¼” for optional inst.
18 – Cut-out 57mm / 2 ¼” for optional inst.
19 – Trim/brake pressure gauge
20 – Option GPS Rack for I Pad mini 4
21 – Radio (if installed)
22 – ATC Transponder (if inst.)
23 – Deleted
24 – LANE switches
25 – Master/starter switch
26 – Switches (Avionics, P2, Lights, Opt.)
27 – Outside air temperature / OAT
28 – Hour meter
29 – ELT control (if inst.)
30 – Fuses

Panel Layout – GPS Insert for Aspen

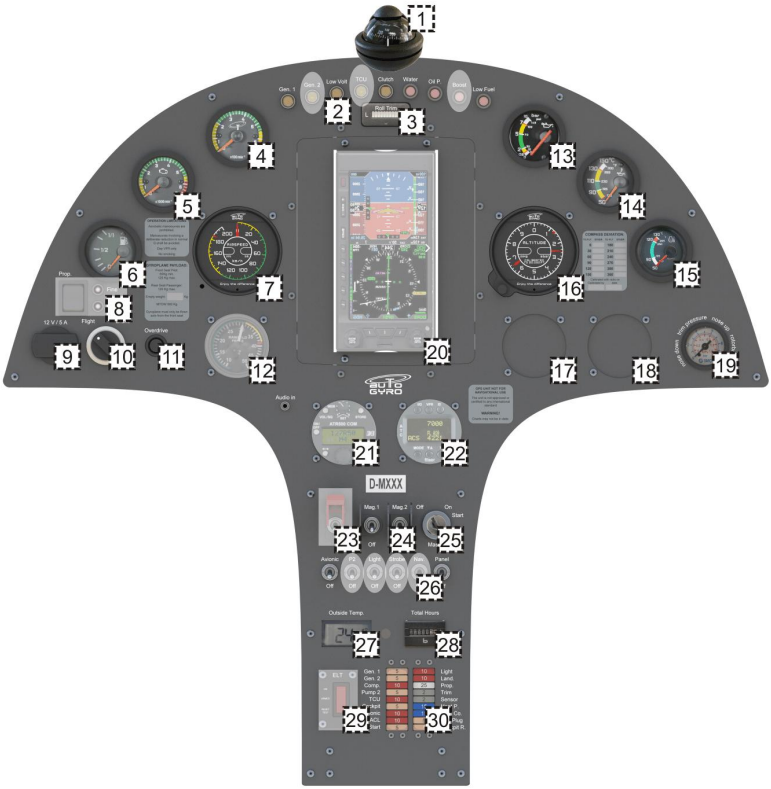

1 – Magnetic compass
2 – Warning lights
3 – Lateral/roll trim indicator
4 – Rotor RPM
5 – Engine RPM
6 – Fuel level indicator
7 – Air speed indicator
8 – Deleted
9 – 12V power receptacle (if installed)
10 – Pneumatic mode selector
11 – Pre-rotator overdrive
12 – Fuel Flow gauge
13 – Oil pressure
14 – Oil temperature
15 – Cylinder head temperature
16 – Altimeter
17 – Cut-out 57mm / 2 ¼” for optional inst.
18 – Cut-out 57mm / 2 ¼” for optional inst.
19 – Trim/brake pressure gauge
20 – Option GPS Insert for Aspen
21 – Radio (if installed)
22 – ATC Transponder (if inst.)
23 – Deleted
24 – LANE switches
25 – Master/starter switch
26 – Switches (Avionics, P2, Lights, Opt.)
27 – Outside air temperature / OAT
28 – Hour meter
29 – ELT control (if inst.)
30 – Fuses

Panel Layout – GPS Insert for Area 500

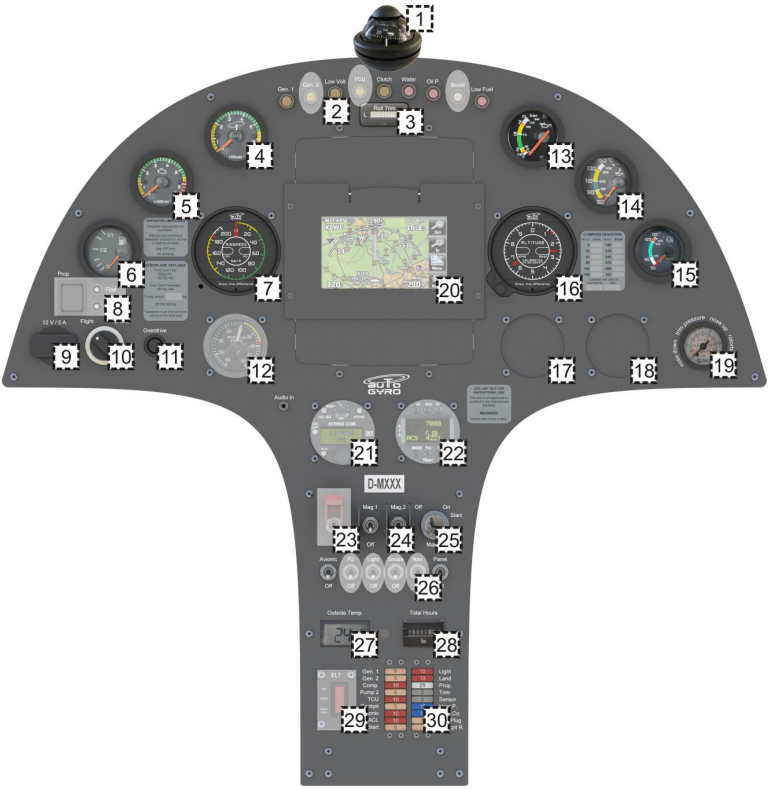

1 – Magnetic compass
2 – Warning lights
3 – Lateral/roll trim indicator
4 – Rotor RPM
5 – Engine RPM
6 – Fuel level indicator
7 – Air speed indicator
8 – Deleted
9 – 12V power receptacle (if installed)
10 – Pneumatic mode selector
11 – Pre-rotator overdrive
12 – Fuel Flow gauge
13 – Oil pressure
14 – Oil temperature
15 – Cylinder head temperature
16 – Altimeter
17 – Cut-out 57mm / 2 ¼” for optional inst.
18 – Cut-out 57mm / 2 ¼” for optional inst.
19 – Trim/brake pressure gauge
20 – Option GPS Insert for Area 500
21 – Radio (if installed)
22 – ATC Transponder (if inst.)
23 – Deleted
24 – LANE switches
25 – Master/starter switch
26 – Switches (Avionics, P2, Lights, Opt.)
27 – Outside air temperature / OAT
28 – Hour meter
29 – ELT control (if inst.)
30 – Fuses

Panel Layout – GPS Insert for Flymap 7"

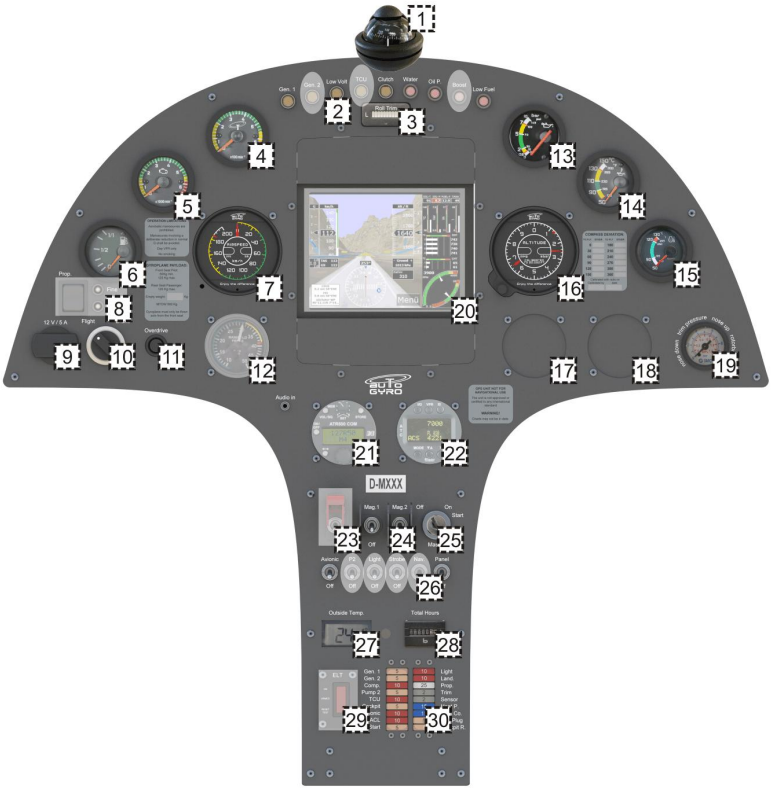

1 – Magnetic compass
2 – Warning lights
3 – Lateral/roll trim indicator
4 – Rotor RPM
5 – Engine RPM
6 – Fuel level indicator
7 – Air speed indicator
8 – Deleted
9 – 12V power receptacle (if installed)
10 – Pneumatic mode selector
11 – Pre-rotator overdrive
12 – Fuel Flow gauge
13 – Oil pressure
14 – Oil temperature
15 – Cylinder head temperature
16 – Altimeter
17 – Cut-out 57mm / 2 ¼” for optional inst.
18 – Cut-out 57mm / 2 ¼” for optional inst.
19 – Trim/brake pressure gauge
20 – Option GPS Insert for Flymap 7"
21 – Radio (if installed)
22 – ATC Transponder (if inst.)
23 – Deleted
24 – LANE switches
25 – Master/starter switch
26 – Switches (Avionics, P2, Lights, Opt.)
27 – Outside air temperature / OAT
28 – Hour meter
29 – ELT control (if inst.)
30 – Fuses

Panel Layout – GPS Insert basic T

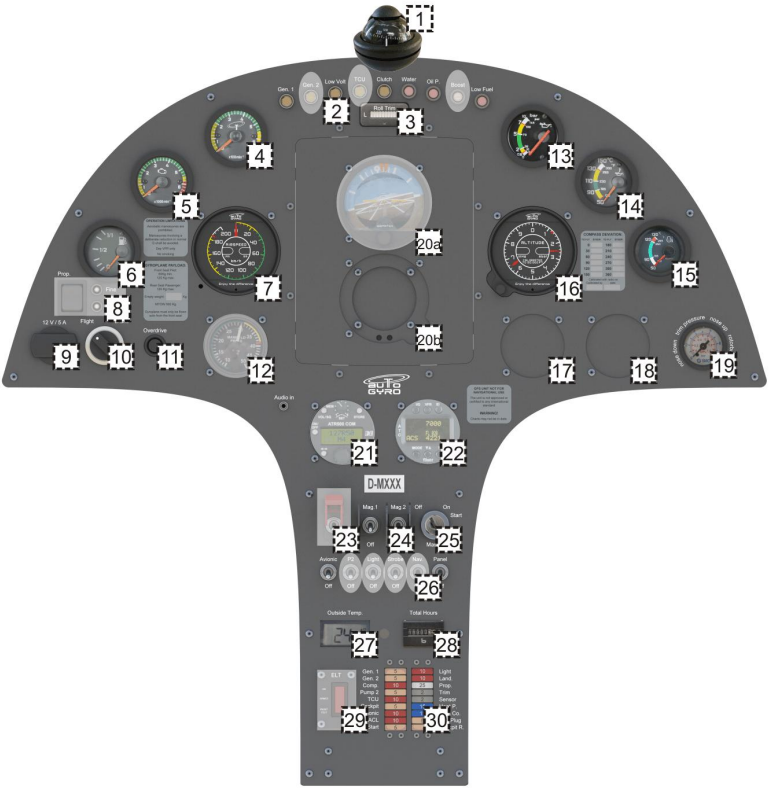

1 – Magnetic compass
2 – Warning lights
3 – Lateral/roll trim indicator
4 – Rotor RPM
5 – Engine RPM
6 – Fuel level indicator
7 – Air speed indicator
8 – Deleted
9 – 12V power receptacle (if installed)
10 – Pneumatic mode selector
11 – Pre-rotator overdrive
12 – Fuel Flow gauge
13 – Oil pressure
14 – Oil temperature
15 – Cylinder head temperature
16 – Altimeter
17 – Cut-out 57mm / 2 ¼” for optional inst.
18 – Cut-out 57mm / 2 ¼” for optional inst.
19 – Trim/brake pressure gauge
20 – 2 x Cut-out 80mm for opt. installation
21 – Radio (if installed)
22 – ATC Transponder (if inst.)
23 – Deleted
24 – LANE switches
25 – Master/starter switch
26 – Switches (Avionics, P2, Lights, Opt.)
27 – Outside air temperature / OAT
28 – Hour meter
29 – ELT control (if inst.)
30 – Fuses

Panel Layout – EFIS Insert Garmin G3X 10"

1 – Magnetic compass
2 – Warning lights
3 – Lateral/roll trim indicator
4 – Rotor RPM
5 – Deleted
6 – Air speed indicator
7 – 12V power receptacle (if installed)
8 – Pneumatic mode selector
9 – Pre-rotator overdrive
10 – Option EFIS Insert Garmin G3X 10"
11 – Fuel Flow gauge
12 – Altimeter
13 – Trim/brake pressure gauge
14 – Radio (if installed)
15 – ATC Transponder (if inst.)
16 – Deleted
17 – LANE switches
18 – Master/starter switch
19 – Switches (Avionics, P2, Lights, Opt.)
20 – Outside air temperature / OAT
21 – Hour meter
22 – ELT control (if inst.)
23 – Fuses

Panel Layout – EFIS Insert Skyview 10"

1 – Magnetic compass
2 – Warning lights
3 – Lateral/roll trim indicator
4 – Rotor RPM
5 – Deleted
6 – Air speed indicator
7 – 12V power receptacle (if installed)
8 – Pneumatic mode selector
9 – Pre-rotator overdrive
10 – Option EFIS Insert Skyview 10"
11 – Fuel Flow gauge
12 – Altimeter
13 – Trim/brake pressure gauge
14 – Radio (if installed)
15 – ATC Transponder (if inst.)
16 – Deleted
17 – LANE switches
18 – Master/starter switch
19 – Switches (Avionics, P2, Lights, Opt.)
20 – Outside air temperature / OAT
21 – Hour meter
22 – ELT control (if inst.)
23 – Fuses

Panel Layout – EFIS Insert Flymap 10"

1 – Magnetic compass
2 – Warning lights
3 – Lateral/roll trim indicator
4 – Rotor RPM
5 – Deleted
6 – Air speed indicator
7 – 12V power receptacle (if installed)
8 – Pneumatic mode selector
9 – Pre-rotator overdrive
10 – Option EFIS Insert Flymap 10"
11 – Fuel Flow gauge
12 – Altimeter
13 – Trim/brake pressure gauge
14 – Radio (if installed)
15 – ATC Transponder (if inst.)
16 – Deleted
17 – LANE switches
18 – Master/starter switch
19 – Switches (Avionics, P2, Lights, Opt.)
20 – Outside air temperature / OAT
21 – Hour meter
22 – ELT control (if inst.)
23 – Fuses

7.15 Intercom

Flight helmets or headsets with standard PJ connectors can be connected to sockets, installed at the throttle and brake panel and at the rear seat. The intercommunication amplifier and VOX control is integrated in the radio.

In case of ATR 833, an audio-in socket is provided in the instrument panel right beside the radio. Audio sources can be connected to the intercom system using a standard 3.5 mm audio jack.

See manufacturer's manual for additional information.

7.16 Pitot Static

Total pressure is picked up by a pitot tube located in the nose section of the fuselage. The tube is connected to the integrated cockpit instruments by a plastic line. Static pressure is measured behind the instrument panel.

Aircraft equipped for Night-VFR have a heated pitot-tube (optional).

7.17 Indicators and Sensors

Rotor speed is measured by a magnetic pick-up, located directly at the geared ring of the rotor head.

Comparison of rotor RPM with engine RPM governs the CLUTCH indication that informs the pilot about a slipping clutch (continuous light) or warns of an attempted take-off run with the risk of blade flapping (blinking).

- CLUTCH is on with engine speeds above 2200 RPM and rotor speed not matching while pre-rotator is depressed (slipping clutch)
- CLUTCH is blinking with engine speeds above 5000 RPM and rotor speed below 200 RPM (attempted take-off run with the risk of blade flapping)

NOTE

If the stick is pulled back more than 5degrees the pre rotator clutch will automatically disengaged. In this case the CLUTCH lamp will indicate a continuous light until the pre rotator button is released.

Outside air temperature (OAT) is measured by a thermocouple located at the fuselage belly above the nose wheel.

Other indicators and sensors have been described in the respective paragraphs. For engine related indicators and sensors see the engine manufacturer's manual.

7.18 Seats and Seatbelts

Forward and aft seat are adjustable and consist of a GRP bowl which is fastened to the frame structure. Basic upholstering consists of seat and backrest cushions with foam core and a fabric covering. As an option, an easily cleanable, water-repellent 'sports design' cover is available.

An adjustable four point harness is fitted for each seat. Make sure that the aft seat belt is buckled and tight when flying with the aft seat unoccupied.

7.19 Stowage Capacity

A storage compartment is located in the fuselage nose section below a GRP flap. The storage compartment flap is held by a bottom hinge and keylock for security in flight. If loaded, observe the weight and balance limitations.

The flap also allows convenient access to the rear of the cockpit panel pneumatic system. Ensure the compartment is locked before flight!

Luggage is also permitted to be loaded in the footwells, subject to the loading constraints placarded. It is the pilot's responsibility to ensure any luggage is suitably restrained to prevent interference with the aircraft controls in flight.

INTENTIONALLY LEFT BLANK

CONTENTS

8.1 Maintenance Obligations 8-1
8.2 General 8-1
8.3 Ground Handling 8-2
8.4 Cleaning 8-2
8.4.1 General Cleaning 8-2
8.4.2 Cleaning in a Saline Environment 8-3
8.5 Refuelling 8-3
8.6 Checking of Engine Oil Level 8-3
8.7 Checking of Engine Coolant Level 8-4
8.8 Tyres and Pressures 8-4
8.9 Lubrication and Greasing 8-4
8.10 Replenishing of Fluids 8-5
8.10.1 Engine oil 8-5
8.10.2 Engine coolant 8-5
8.11 Engine Air Filter 8-5
8.12 Propeller 8-5
8.13 Battery 8-6
8.14 Winter Operation 8-6
8.15 Removal, Disassembly, Assembly and Installation of the Rotor 8-7
8.15.1 Removal of the Rotor System 8-7
8.15.2 Disassembly of the Rotor System 8-8
8.15.3 Assembly of the Rotor System 8-9
8.15.4 Installation of the Rotor System 8-10
8.16 Road Transport 8-10
8.17 Repairs 8-11

INTENTIONALLY LEFT BLANK

SECTION 8 - HANDLING AND SERVICING

This chapter contains guidelines for correct handling and servicing of the gyroplane, as well as manufacturer recommendations helping to keep its performance, reliability and value.

8.1 Maintenance Obligations

The owner/operator is responsible to ensure that the aircraft is kept in an airworthy condition. With respect to continuing airworthiness, manufacturer requirements and regulations from your competent aviation administration (for example annual airworthiness inspection) need to be complied with.

All airworthiness limitations, inspections and time limits are described in detail in the maintenance manual. However, for owner/operator's information the intervals for mandatory maintenance events are provided as follows:

- 25 hrs: "25 hrs inspection" (one-time / non-recurrent)
- 100 hrs / 12 months (whatever occurs first): "100 hrs inspection"
- 12 months/ Annual airworthiness review (if or as required by a relevant organisation)

For engine maintenance and overhaul, refer to the engine manufacturer's manual.

Special inspections have to be performed by an authorized and qualified maintenance centre or the manufacturer after operational incidents, which are

- Suspected hard landing
- Rotor contact with obstacle
- Propeller contact with obstacle or external impact
- Bird strike
- Lightning strike

If any of the above cases apply, mark the aircraft as 'unserviceable' and consult the manufacturer or an authorized maintenance and repair station before further operation.

'Authorised' means approved to carry out such work on an AutoGyro aircraft by the responsible national authority. AutoGyro also recommends that the organisation has also attended an AutoGyro training course.

Apart from these obligatory inspections and maintenance tasks, the owner/operator is entitled to perform the following preventive and in-between maintenance tasks and checks, as well as exchange of parts and minor repairs. The tasks authorised vary between national authorities, consult their published information.

8.2 General

Whenever possible, park the gyroplane in a place where it is protected from direct sunlight, wind and humidity. High humidity, especially in combination with a salt-laden atmosphere will lead to corrosion and/or composite structure paint blisters. The sunlight's ultra-violet radiation and the heat impact on the GRP/CRP components may lead to a degradation of the materials integrity. The manufacturer will take no responsibility for damage or impaired safety margin due to improper treatment.

8.3 Ground Handling

Experience shows that aircraft may be exposed to much higher loads when operated on ground, than when in flight.

Take care not to impose high loads caused by excessive and fast taxying on rough terrain, or hard bouncing of the aircraft over the hangar thresholds etc.

Use caution when handling the gyroplane on ground. Do not push at the rudder or at the outer stabilizers. Avoid excessive swing of the rotor blades as repeated bending ultimately leads to fatigue or damage. Taxying over rough ground with the rotor tie-down bag fitted leads to excessive flexing of the un-tied blade and is to be avoided.

8.4 Cleaning

8.4.1 General Cleaning

Care and regular cleaning of engine, propeller, rotor system and fuselage is the basic foundation for airworthiness and reliability. Therefore, the gyroplane should be cleaned after every last flight of the day or more often, if environmental conditions dictate.

Dirty rotors, especially insect debris, and dirty propellers, are less efficient and vibrate more. Climb rate is reduced. In very dirty cases pilots can expect 5-10% loss.

In order to protect the gyroplane against dirt, dust, bird soil, and sunlight, the aircraft should be covered with a light plastic tarpaulin or cloth (use a clean, lint-free cloth for the windscreens). Openings to the engine, service access port and airspeed indicator should be closed after the flight (insects, birds etc.).

Contamination can be cleaned with clean water, possibly with mild cleaning additives. To clean the rotor it is best to soak contamination with a cloth or towel, wipe with soft or micro-fibre cloth, and rinse thoroughly with water.

A clean screen aids safe flying. Clean with fresh water for removal of grit etc., without rubbing the grit into the screen surface, then use proper Plexiglas cleaning sprays such as Plexus with soft lint free cloths to polish and finish the surface inside and out. Read and follow the product instructions.

A good quality polish helps protect the surface finish and reduce surface friction.

Use of RainX or other proprietary rain repellent compound will help rain drops wash away when flying in rain. Read the instructions, and ensure the compound is suitable for use on Makrolon. It is recommended to check that it does not affect the canopy by applying to a small rearwards area first and checking for any negative reaction.

CAUTION

Do not use gasoline or solvents as cleaning agents for the windshields, as it will destroy them irreparably. Do not let windshields sun-dry after washing as they will stain permanently.

8.4.2 Cleaning in a Saline Environment

Operation in saline conditions require a higher degree of aircraft care and cleanliness. The following procedures and recommendations should be adhered to after EVERY flight where possible to minimise degradation of the aircraft components that may be experience due to the corrosive environment.

1. Clean the complete aircraft directly after flight. It is recommended that AF-50 be used in spray form iaw the manufacturer's instructions, as this is designed for the aerospace industry and has been shown to neutralize salt. At the very minimum, the aircraft should be cleaned/rinsed with fresh water to wash the salt away, taking care not to allow water ingress into electrical components or instruments. If using water, ensure the aircraft is dry before carrying out steps 3 and 4.
2. Other steel parts should be re-protected with a suitable corrosion block grease such as chain wax or cavity spray (AG-CPS-01).
3. It is recommended that the aircraft be place in an enclosed building (hangar) whenever it is not in use.
4. It is strongly recommended that the aircraft be completely covered at all times on the ground to avoid salt from the atmosphere being deposited on its surfaces and components.

8.5 Refuelling

Have aircraft grounded before refuelling by attaching the earth (ground) lead to the engine exhaust pipe. Be aware that most airfield refuelling equipment is laid out for larger diameter tank filler necks and high flow rates. To avoid contamination, use a funnel with strainer and/or filter when refuelling from canisters.

A large diameter crossover line connects both tanks to ensure equal level.

NOTE

Do not fill to the absolute maximum in order to allow for thermal expansion of the fuel.

8.6 Checking of Engine Oil Level

Before attempting to check the engine oil level double check that both LANE switches and keyswitch are switched off. The oil level is measured with the aircraft in a level attitude and should be between the marks on the dipstick.

Open access door, open and remove oil reservoir cap and remove dipstick. Turn the engine over slowly by the propeller in the correct sense of rotation until you clearly hear the oil gurgle in the tank over several rotations. The oil is pushed into the tank when pressure is felt whilst turning the prop, meaning that the crankcase pressure is at its maximum.

Insert the cleaned dipstick fully for measurement. Fill up oil according to the engine manufacturer's specification when required. After completion make sure the dip stick is in place and the reservoir cap is back on securely. Close the access door.

CAUTION

Never attempt to turn the engine against its sense of rotation as this may lead to expensive hydraulic tappet damage.

8.7 Checking of Engine Coolant Level

The expansion tank is located above the oil reservoir and can be accessed through the access door. Minimum cooling fluid level can be read from a sight glass with a cold engine.

In case no cooling fluid is visible through the sight glass a technical defect is most probable. Have engine inspected before the next flight.

8.8 Tyres and Pressures

Main wheels ..... 1.8 – 2.2 bar
if operating continuously at 560kg MTOW…….…… 2.3 bar
Nose wheel ..... 2.0 – 2.4 bar
If operating continuously at 560Kg MTOW……..…….. 2.2 -2.3 bar

All wheels fitted with Tundra tyres ..... 1.0 – 1.2 bar

Tyres fitted with green valve caps have been filled with nitrogen.

The standard mainwheels are fitted with the heavier duty Sava 4.00-8C B13 71J 6PR TT tyres for operation at 560Kg MTOW.

The standard nose wheel is fitted with the Tost Aero 400-8 tyre (especially for 560Kg MTOW operation).

Tundra tyres are available as an option.

8.9 Lubrication and Greasing

Between maintenance intervals the owner/operator is entitled to do the following lubrication and greasing:

Component	Interval	Application	AutoGyro Part Number
Teeter hinge	5 hrs (recommended)	as required	88-00-00-S-30477 or equivalent
Pre-rotator drive coupling sleeves	as required	as required	88-00-00-S-45506

CAUTION

Rotor vibration is often caused by looseness of the teeter bolt in the rotor or teeter tower bushes, in turn caused by insufficient greasing of the rotor grease nipple. Regular greasing and rotating of the bolt reduces wear.

While lubricating teeter hinge (especially with new bush bearings and related close gap dimensions) it may be possible that only very small amounts of lubricant pass through the grease nipples on the rotor. In this case, do not press too hard but better remove the bolt, lubricate the outside and re-install. Use a new split pin!

8.10 Replenishing of Fluids

8.10.1 Engine oil

See engine manufacturer's manual & Service Instruction.

8.10.2 Engine coolant

See engine manufacturer's manual & Service Instruction.

8.11 Engine Air Filter

The air intake filter needs to be replaced or cleaned according to the manufacturer‘s recommendation. Depending on environmental conditions, such as dust, sand, or pollution the recommended rate of maintenance should be increased as required

8.12 Propeller

Clean regularly as contamination will noticeably decrease its efficiency, resulting in a negative effect on both aircraft performance and noise emission. Use either pure water or add mild cleaning additives. Let contamination soak, then remove with a soft cloth or micro fibre material and rinse with enough water. Check for erosion and damage, especially at the leading edge and blade tips. Check tight fit at the propeller blade root or any unusual sound when tapping the blades, in case of a variable pitch propeller. If in doubt or if damage is obvious, consult the aircraft manufacturer or a qualified maintenance station. Minor chips may be repaired. Consult the AMM for detail or propeller manufacturers manual (where available).

NOTE

Flight in rain will result in increased wear to the propeller leading edge. If prolonged operation in rain is required, fitment of a suitable thin propeller tape to the leading edge will reduce wear.

Note that propeller tape will reduce propeller efficiency and aircraft performance dependent on the thickness and application. It is the operator's responsibility to understand and plan for this!

8.13 Battery

The aircraft is fitted with a 13Ah maintenance-free gel electrolyte battery or, where approved, LiFePo4 battery. Maintenance is therefore limited to outside soundness, correct attachment, and cleaning. Check integrity of the electrolyte battery as leaking fluid contains corrosive sulphuric acid which would lead to extensive damage when contacting the framework and attachments.

Charge the battery only with a charging device which is suitable for battery fitted.

CAUTION

The battery must never be deep discharged, as it will be damaged. If so, it might need to be replaced.

8.14 Winter Operation

The cooling system for the cylinder heads of the engine is filled with a mixture of anti-freeze and water, which gives freezing protection down to -20°C (-4°F). Using a hydrometer, check protection temperature of the coolant and add anti-freeze as required.

If temperatures are expected to fall below protection temperature, drain the coolant, and if required for service, refill with pure antifreeze. As anti-freeze ages, renew the coolant every two years. Read the engine manual for the manufacturer's recommendations.

CAUTION

Pure antifreeze is not as good an engine coolant as a 50/50 mix with water. Take care that engine coolant limits are not exceeded. As soon as ambient temperatures permit, drain and refill with the normal coolant mix.

During winter operations the necessary operating temperature for oil and cooling agent may not be reached. This can be compensated by taping some portion of the coolers. Monitor all engine temperatures closely after having the coolers taped and modify as required.

When using heated clothing be aware of the electrical power demand in regard to the generator performance. Do not exceed the generator output value in order not to drain the battery. Low Volt conditions will indicated by the respective warning light and nonessential consumers will be disconnected.

If flying in the winter with a frozen-over or snow covered runway, it is advisable to remove the wheel spats in order to avoid their damage and snow build up inside them. It is the pilot's responsibility to ensure that in the rear part of the spat no snow has built up, which could lead to freezing against the wheels and stopping them from turning. Always use Loctite 243 on wheel spat centre screws.

Before each flight inspect all control cables for free and easy movement and sufficient lubrication.

CAUTION

Operation of the aircraft on very slippery surfaces requires great care – the aircraft may slide sideways during pre-rotation, take off, or in ordinary ground handling, resulting in high potential for an accident. Use care!

8.15 Removal, Disassembly, Assembly and Installation of the Rotor

In order to transport or park the gyroplane with minimum space requirements, the rotor system can be removed and disassembled, if needed. In order to do so, a second person is needed to assist and help to prevent any damage to the gyroplane or the rotor system.

WARNING

Unless properly supported within the road vehicle (such that road vibrations do not induce fatigue or other damage to the rotor system) the rotor system must be removed, disassembled and suitably protectively packaged for road transport.

CAUTION

When removing or disassembling make sure to mark all parts so that each and every component of the rotor system is reassembled and installed in exactly the same way and orientation. Some rotor blades have loose washers in them which are required as balance weights. Do not remove or restrain if present!

8.15.1 Removal of the Rotor System

1. Secure the gyroplane on level ground by engaging the parking brake, adjust the rotor system to park 30deg from fore-aft, and pressurize the rotor brake up to maximum.
2. Remove and discard split pin (4) and unscrew the castellated nut (5). The rotor system has to be tilted onto the black rotor teeter stop.
3. The teeter bolt (1) has to be extracted by using only the hand, not a hammer. If needed tilt the rotor blades carefully onto the teeter stop, in order to prevent the bolt from jamming. Make sure that the rotor stays level in the teeter axis, if not the teeter bolt will damage the Teflon coated bushes, while being pushed out.
4. A supervised second person has to hold the rear blade of the rotor system.
5. Lift the rotor system carefully out of the teeter tower and be aware of the position of the shim washers (2). Their thicknesses may differ and it is essential that they are reinstalled on the correct side! They are marked with dots to identify the correct side.
6. Remove the rotor system to one side by letting it rest on your shoulder and take care not to collide with stabilizer or propeller.
7. The shim washers and the teeter block in the hub are marked on each side with either one or two engraved dots. Directly after the disassembly the shim washers need to be fixed on their respective side with cable ties.
8. The rotor system must not be placed on a dirty or grainy surface, as the blades can scratch and damage easily. The best way is to place the rotor blades centrally onto two stands, supporting the rotor at approximately 2 m distance from the hub.

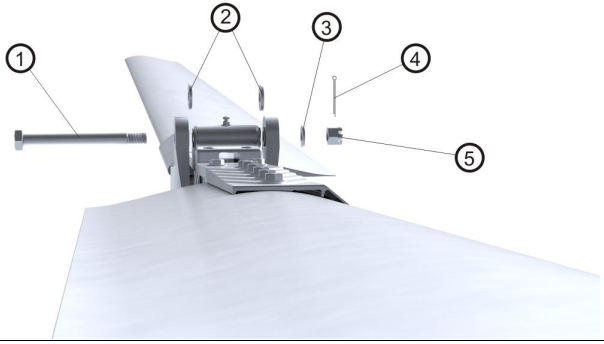

1 – Teeter bolt	4 – Split pin
2 – Shim washers (2 ea.)	5 – Castellated nut
3 – Outer washer	

Handling of the Rotor System

Do not lift or support the rotor system at its blade tips as the bending moment due to the weight of the hub assembly may overstress the blade roots. If possible, handle with two persons while holding approximately in the middle of each blade. When supporting the system use two stands each positioned in about 2 metres distance from the hub.

CAUTION

The assembled rotor system can be damaged irreparably if handled incorrectly. If the rotor system is lifted in a wrong way, its own weight may overstrain the material.

8.15.2 Disassembly of the Rotor System

1. To disassemble the rotor system, place it upside down onto a clean surface or stands to support the rotor at approximately 2 m from the hub (so that the system is at the design coning angle of 2.4deg per side).
2. Loosen locknuts (6) on the first blade by counter holding the corresponding bolt head to prevent it from turning inside the blade holes.
3. Push out all fitting bolts (4) without any force, but use no more than a gentle tapping if necessary. Tilt the rotor blade up and down to support easy removal of the bolt. Note that fitting bolts have different shaft lengths.
4. Carefully pull the rotor blade out of the hub (1) in radial direction and take off the clamping profile (2).

5. Repeat step 2 to 4 on second rotor blade.
6. **Do not disassemble the rotor hub!**
7. Store and transport rotor blades, clamping profile and rotor hub only in air cushion foil or using other suitable means to prevent bending or surface damage.

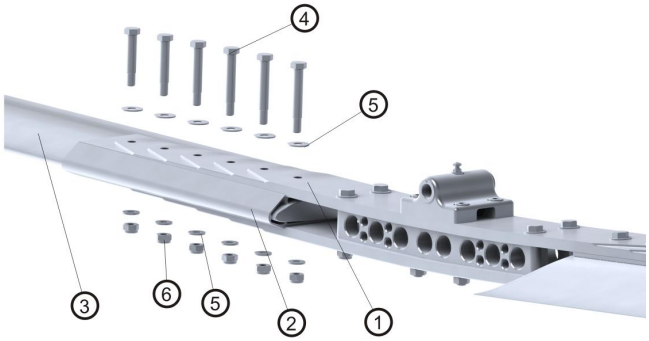

1 – Rotor hub	4 – Fitting bolts (6 ea.)
2 – Clamping profile	5 – Washer (12 ea.)
3 – Rotor blade	6 – Lock nuts (6 ea.)

8.15.3 Assembly of the Rotor System

1. The rotor blades, clamping profile and rotor hub are labelled with an engraved serial number.
2. Insert the first rotor blade carefully into the clamping profile. Make sure that all serial numbers match.
3. Fit the rotor hub side with the according serial number to clamping profile and blade. Insert fitting bolts without using force so that the bolt end is on top when the rotor system is installed. For re-identification and correct installation position the shaft length is provided in the figure above. Example: 40/12 means shaft length 40mm.
4. Position the washers and the locknut and hand-tighten all nuts.
5. Torque-tighten nuts with 15 -25 Nm from the inside to the outside, using a torque wrench. When doing so, counter-hold bolts to prevent any damage the hub and blade holes.
6. Repeat steps 2 to 5 for the second rotor blade.

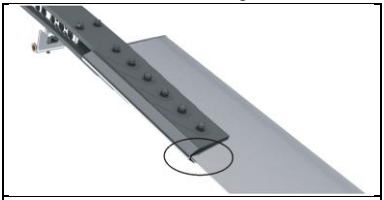

Position where serial numbers are engraved (bottom side)

8.15.4 Installation of the Rotor System

CAUTION

During installation make sure to have each and every part of the rotor system installed in exactly the same way and orientation as it was before.

1. Secure the gyroplane on level ground by engaging parking brake, adjust the rotor head or teeter tower corresponding to fore-aft and pressurize the rotor brake up to maximum.
2. Check correct matching of parts: The rotor hub and the teeter tower are marked with two dots according to the orientation for installation.
3. Apply 88-00-00-S-30477 to all bushes and the teeter bolt.
4. Lift the rotor blade with a second briefed person (one person standing aft, one person standing directly in front of the hub).
5. Approach with the rotor system from the side to the gyroplane and make sure not to collide with propeller or stabilizer. Insert the rotor system into the hub from above while standing on a ladder or the rear seat.
6. The second person can let go, as soon as it is resting centrally in the teeter tower on the teeter stops.
7. Insert teeter bolt by hand in the same orientation as it was before (bolt head should be at that side of the teeter block which is marked with one dot) while matching the shim washers with the corresponding installation positions.
8. Check direction of assembly and shim washers: rotor hub, teeter tower and shim washers are marked on each side with either one or two engraved dots.
9. If the teeter bolt cannot be inserted, tilt the rotor blade along the teeter axis with the free hand.
10. Install washer and castellated nut. Hand-tighten only, 1-2Nm and secure with a new split pin. Use split pins only once. Make sure that the rotor system teeters on the teeter bolt, and not the teeter bolt in the teeter tower.
11. Check that the rotor teeters freely to the teeter stops, and grease the hub block grease nipple. Turn the rotor fore/aft and fit tie down bag to secure the rotor.

8.16 Road Transport

If road transport cannot be avoided, transport with minimum fuel, which reduces airframe loads and prevents fuel spilling through vent pipes.

Switch ELT (if installed) off for road transport to avoid false alarms!

Tie-down the fuselage using the following procedure:

- Restrain main wheels (blocks/chocks)
- Put a wooden block below the lowest point of the keel tube and lash keel tube against wooden block. The block should be dimensioned so that the main wheels are half way unloaded
- Lash down both main wheels through the lashing lugs (use rims/axles alternatively)
- Lash down nose wheel through the axle
- For container transport or shipping, use the mast tie-down kit (option)

Furthermore, it is recommended to protect the gyroplane against external elements. The rotor blades must be packed carefully, as even the smallest damages may force the replacement of the complete system.

WARNING

Unless properly supported within the road vehicle (such that road vibrations do not induce fatigue or other damage to the rotor system) the rotor system must be removed, disassembled and suitably protectively packaged for road transport.

CAUTION

When wrapping make sure that the foil or stretch wrap does not cover the painted surface directly. Put a soft layer in between for damage protection and let plastic components breathe. Do not expose wrapped gyroplane or parts to sun radiation or heat in order to avoid paint damage.

8.17 Repairs

IMPORTANT NOTE

Repairs may only be executed by Persons authorised by the responsible national authority, and in strict compliance with the AMM and any issued repair instructions. AutoGyro highly recommend that these persons are either AutoGyro trained, or in direct contact with AutoGyro Tech Support

INTENTIONALLY LEFT BLANK

SECTION 9 - SUPPLEMENTS

LIST OF SUPPLEMENTS

9-1 Variable Pitch Propeller – Woodcomp KW-30
9-2 Lights
9-3 GPS/Moving Map Systems
9-4 ELT (Emergency Locator Transmitter)
9-5 Instructor Cockpit
9-6 Amphibious Floats
9-7 Aux Generator 12V
9-8 Power Reduction Rotax 915iS Engine

INTENTIONALLY LEFT BLANK

9-1 Variable Pitch Propeller – Woodcomp KW-30

9-1.1 General

A constant speed/variable pitch propeller (VPP) manufactured by Woodcomp is available as optional equipment to optimize the propeller efficiency, fuel consumption, and noise in all flight regimes and power settings. This is achieved by changing the propeller pitch, in turn by adjusting the constant speed setting using the blue panel mounted adjustment knob.

Refer also to the Woodcomp KW-30 Operator's Manual!

In principle, providing the throttle is set to give sufficient power, then the engine rpm set will be maintained.

The propeller pitch setting is always set full fine for take-off and landing (in case of a go-around). In general flight the pitch setting is adjusted to:

- Ensure that the engine does not over-rev when at a high speed and high power setting, or high altitude,
- Obtain a low aircraft noise by reducing engine rpm
- Obtain the leanest fuel flow at the desired cruise speed. To aid the pilot a fuel flow gauge is fitted. Once the desired cruise speed is obtained, the propeller pitch is adjusted for the minimum fuel flow.

NOTE

Aircraft fitted with automatic Single Lever Throttle and Propeller control have no blue knob, and require no pilot input

9-1.2 Limitations

No change to standard aircraft

9-1.3 Emergency Procedures

Proceed according to generic variable pitch propeller procedure provided in SECTION 3 for the standard aircraft.

9-1.4 Normal Procedures

9-1.4.1 Set Propeller to FINE

In order to set the propeller to FINE for start-up, take-off and approach, press the middle of the blue propeller control knob mounted on the instrument panel, and push the knob fully to the panel.

9-1.4.2 Adjust Propeller COARSE

To adjust the propeller pitch to a coarser setting, depress the button in the middle of the blue propeller knob on the panel, and pull it rearwards (coarse adjustment), or rotate the

knob for fine Vernier-style adjustment. Clockwise for fine, anti-clockwise for coarse adjustment.

NOTE

As a safety measure, the mechanical end stop in full COARSE position is chosen to allow a residual climb rate of 1.28 m/s (250fpm) in standard atmospheric conditions at sea level with maximum

9-1.4.3 Functional Check VPP (manual adjustment only)

NOTE

Functional check of the variable pitch propeller should be executed during run-up (see 4.7) if safe to do so.

Engine RPM: 5000 – Adjust variable pitch propeller in direction 'COARSE' until engine RPM decreases significantly. Afterwards adjust back into 'FINE', RPM must increase again up to 5000. The propeller constant speed full coarse setting is 4600rpm, to enable a positive climb rate should the pitch adjustment system fail

CAUTION

Respect power plant limitations and instrument markings (see 2.6) during functional check.

9-1.5 Performance

A fuel flow gauge is provided so that the aircraft operator can judge the optimum fuel flow/rpm setting. See also the Rotax engine operators' handbook.

NOTE

Keep in mind that engine and propeller performance is affected by altitude and temperature. For detailed information refer to the engine manufacturer's and propeller manufacturer's documentation.

9-1.6 Weight and Balance

No change to standard aircraft limitations. The Woodcomp KW30 propeller weighs some 7.5Kg more than the HTC 4-blade propeller.

9-1.7 System Description

Refer to the Woodcomp user manual UM-06.

Also refer to the Jihostroj Hydraulic governor manual for P-AB0-X governors

And also to RS Flight systems Single Lever Power Control manual for the automatic propeller governor (where fitted, replacing the P-AB0-X governor).

9-1.8 Handling and Servicing

Refer to the manufacturer's documentation.

INTENTIONALLY LEFT BLANK

9-2 Lights

9-2.1 General

Depending on customer's configuration the gyroplane can be equipped with optional

- Landing lights (six forward facing LEDs)
- Navigation /position lights (Autogyro manufactured for day conspicuity, Certified AVEO units for day and night VFR use)
- Strobe lights embodied in the navigation/position lights.
- Underbody high-intensity LED landing light
- Instrument panel lighting with map-light, front and rear seat

View showing forward facing lights.

View showing underbody landing light option fitted

Navigation and strobe units (Aveo certified) fitted to either side of the tail fins

9-2.2 Limitations

No change to standard aircraft

9-2.3 Emergency Procedures

No change to standard aircraft

9-2.4 Normal Procedures

The lights can be switched on or off by respective switches in the centre panel, labelled

- “Light” for landing light (and underbody landing light where fitted)
- “Nav” for navigation/position lights
- “Strobe” for strobe lights
- ‘Land’ for the underbody landing light

Due to their small silhouette gyroplanes are easily overlooked, especially if approached directly from behind, such as on approach. It is therefore highly recommended that navigation and strobe lights are switched on during flight.

9-2.5 Performance

No change to standard aircraft

9-2.6 Weight and Balance

No change to standard aircraft

9-2.7 System Description

Navigation and strobe lights are installed as combined units on the outer surface of the left and right side tail fins of the horizontal stabilizer. The landing light consists of a left and right headlight unit.

An underbody bright landing light (large LED cluster lamp) may be fitted (optional).

Instrument panel lighting may also be provided, with a dimmer switch, map light, and interior light (optional).

9-2.8 Handling and Servicing

No change to standard aircraft

INTENTIONALLY LEFT BLANK

9-3 GPS/Moving Map Systems

9-3.1 General

Depending on customer's configuration the gyroplane can be equipped with different GPS/Moving Map Systems as optional equipment.

Example G3X Installation

Note

Any moving map system shall be used for reference only and does not replace proper flight planning and constant oversight and awareness.

9-3.2 through 9-3.6

No change to standard aircraft

9-3.7 System Description

Refer to the manufacturer's documentation.

9-3.8 Handling and Servicing

Refer to the manufacturer's documentation.

INTENTIONALLY LEFT BLANK

9-4 ELT (Emergency Locator Transmitter)

9-4.1 General

Depending on customer's configuration or legal requirements the gyroplane can be equipped with an ELT (Emergency Locator Transmitter) as an option. The ELT sends distress signals on 406 MHz and 121.5 MHz in case of a crash or can be activated manually by means of a remote cockpit switch or at the ELT's front panel. These distress signals are received and processed by COSPAS-SARSAT satellite-based search and rescue (SAR) system and by airborne and ground stations. The system is designed to remain permanently attached to the aircraft.

9-4.2 Limitations

No change to standard aircraft.

9-4.3 Emergency Procedures

In case of the following events, manually activate the ELT by switching the remote cockpit switch to 'ON':

- Expected crash landing
- Forced landing in hostile terrain (high vegetation, trees, rugged ground)
- Ditching in hostile water (sea state, temperature, off-shore)

Consider to squawk '7700', if transponder is installed and to make an emergency call.

When on ground, inform ATC, any nearby tower or any station via 121.5 MHz (or frequency appropriate to the airspace that the aircraft is operated within) or mobile phone about the emergency, if still possible.

9-4.4 Normal Procedures

During normal operation, the front panel switch of the ELT transmitter must be in 'ARM' position in order to allow automatic activation (g-sensor). In addition, the ELT can be activated by switching the remote cockpit switch to 'ON'. The red visual indicator will be on.

During road transport, shipment, when the aircraft is parked for a longer period or for maintenance operation, the front panel switch of the ELT should be switched to 'OFF' in order to avoid false alarms.

In case of accidental activation, the ELT can be reset either by switching to 'RESET/TEST' on the Remote Control Panel or switching to 'OFF' on the ELT transmitter.

9-4.5 through 9-4.6

No change to standard aircraft

9-4.7 System Description

The ELT installation consists of the following components

- ELT transmitter with visual indicator and mounting bracket
- ELT antenna

- Remote cockpit switch with visual indicator

The ELT transmitter is installed in the stowage compartment in the nose. Access to the ELT master switch is gained in this way. The ELT transmitter is connected to the ELT antenna mounted on the rear left side of the front seat. A remote cockpit switch with visual indicator is provided in the instrument panel. In order to use the remote cockpit switch or to enable automatic activation, the 3-position toggle switch of the transmitter must be set to 'ARM'.

If ELT is inadvertently activated, use the 'RESET/TEST' position of the rocker switch to stop transmission and reset the unit. The red visual indicator will extinguish when unit is reset.

Operators should regularly use this switch to test and verify the ELT function.

The ELT system sends distress signals on 406 MHz and 121.5 MHz. The 406 MHz transmission carries digital data which enable the identification of the aircraft in distress and facilitate SAR operation (type of the aircraft, number of passengers, and type of emergency). The 406 MHz message is transmitted to the COSPAS-SARSAT satellites and is downloaded to one of the 64 ground stations. The aircraft is located by Doppler effect by the LEO satellites with a precision better than 2 NM (4 km) at any point of the earth.

The 121.5 MHz frequency is no more processed by COSPAS-SARSAT system but is still used by SAR services for homing in the final stage of rescue operations.

In the event of a crash, the ELT activates automatically by means of a g-switch and transmits a sweep tone on 121.5 MHz and the 406 MHz signal.

For further information, please refer to the manufacturer's documentation Note that apart from the initial registration process, recurrent registration may apply. It is the aircraft operator's responsibility to ensure compliance!

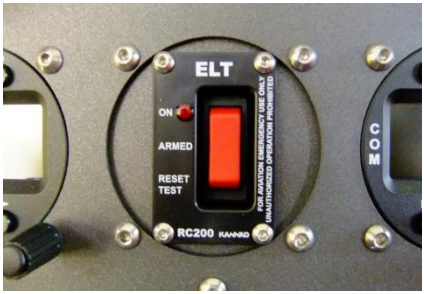

Remote cockpit switch

ELT transmitter and cockpit switch

9-4.8 Handling and Servicing

The ELT transmitter contains a battery with a limited lifetime. See placard and accompanying documentation. For maintenance and testing, please contact your qualified service partner.

INTENTIONALLY LEFT BLANK

9-5 Instructor Cockpit

9-5.1 General

Depending on customer's configuration the gyroplane can be equipped with instructor cockpit installed behind the backrest of the forward seat. In addition to the most important warning lights and basic flight and engine instruments, the panel also features Keyswitch/LANE switches and a 12 V power outlet for the instructor's personal handheld navigation equipment.

9-5.2 through 9-5.6

No change to standard aircraft

9-5.7 System Description

The optional instructor cockpit is installed behind the backrest of the forward seat in direct view of the flight instructor or examiner.

Airspeed, altitude, engine RPM and rotor RPM are presented as 57 mm conventional-type instruments to allow a convenient instrument scan of the most important and flight critical parameters.

In a similar arrangement as in the forward cockpit, the following warning lights are fitted

- LANE A
- LANE B
- Water
- Oil P.
- Low Fuel

Instructor cockpit

Two guarded ignition (LANE) switches allow engine shut-down from the aft seat, if required for training or safety purposes. NOTE: This function is only available if the instructor cockpit keyswitch is in the ON position.

A 12 V power outlet in the lower left hand portion provides supply of handheld navigational equipment. This is functional when the instructor keyswitch is both OFF and ON.

There is electrical function of the panel at all times when the main keyswitch is ON.

The instructor keyswitch can be used to start the aircraft.

The instructor keyswitch key should be REMOVED unless the rear seat is occupied by an instructor.

The cockpit is optionally fitted with night VFR panel lighting, map-light and dimmer switch.

9-5.8 Handling and Servicing

No change to standard aircraft

INTENTIONALLY LEFT BLANK

9-6 Amphibious Floats (Separate Supplement)

9-6.1 General

For additional instruction on operation of the MTO Sport 2017 fitted with amphibious floats, see addendum supplementary procedure.

INTENTIONALLY LEFT BLANK

9-7 Aux Generator 12V

9-7.1 General

The voltage of the additional generator is switched via a relay. This relay is connected in parallel to the main relay.

This means that the auxiliary generator is only active when the motor is operated above 2500rpm for 10s or longer.

However, it is only disconnected when the key switch is switched off.

The LED is also switched via the relay. This means that the LED is initially activated via the relay, and as soon as voltage is applied to the excitation winding, the LED is supplied via the auxiliary generator. The reason for this is to inform the pilot that the aux generator is truly on line.

INTENTIONALLY LEFT BLANK

9-8 Power Reduction of the Rotax 915iS Engine

9-8.1 General

For approval of the AutoGyro MTOsport 2017 gyroplane in the Swiss market, a reduction of the Rotax 915iS engine power is required to 90kW. This is achieved by the reduction of engine rpm through limitation of the Woodcomp KW30 constant speed propeller.

9-8.2 Limitations

9.8.2.1 Rate of Climb (Para. 5.5 in the POH)

Rate of climb, 560kg, Vy,
MCP……..…..600ft/min

9.8.2.2 Take-off Data (Para. 5.6 in the POH)

Take-off roll……..……..80-120m
Take-off distance……...……..……..475m

9-8.3 Emergency Procedures

No change to standard aircraft

9-8.4 Normal Procedures

No change to standard aircraft

9-8.5 Performance

A placard stating maximum engine rpm must be placed in a position on the cockpit clearly visible to the pilot (Para. 2.12 in the POH).

Power reduction to 90kW at max 5060RPM

9-8.6 Weight and Balance

No change to standard aircraft

9-8.7 System Description

No change to standard aircraft

9-8.8 Handling and Servicing

No change to standard aircraft

INTENTIONALLY LEFT BLANK

CONTENTS

Low-G Avoidance 10-1
Side Slip in Gyroplanes 10-1
Flying Low on Fuel Is Dangerous 10-2
Do Not Push the Envelope and Remain Easy On the Controls 10-2
Strobe Lights On – For Your Own and Other's Safety 10-2
Propellers and Rotors Can Be Extremely Dangerous 10-2
Power Lines and Cables Are Deadly 10-2
Loss of Visibility Can Be Fatal 10-3
Overconfidence Prevails in Accidents 10-3
Flying Low over Water is Very Hazardous 10-3
Conversion Pilots Constitute High Risk When Flying Gyroplanes 10-3
Beware of Demonstration or Initial Training Flights 10-4
Training Off-Field Simulated Engine Failures 10-4

INTENTIONALLY LEFT BLANK

SECTION 10 - SAFETY TIPS

General

This section provides miscellaneous suggestions and guidance to help the pilot operate the gyroplane more safely.

Low-G Avoidance

Never push the control stick forward to descend or to terminate a pull-up (as one would in an airplane). This may produce a low-G (near weightless) condition which can result in a situation with reduced or lost lateral roll control and significant loss of main rotor RPM. Always reduce power to initiate a descent.

Side Slip in Gyroplanes

Excessive side slip has to be avoided. Side slip can be safely performed up to the degree which is necessary for proper runway alignment for landing within maximum demonstrated crosswind components. Excessive side slip starts at a point where de-stabilizing effects of the fuselage balance out or even supersede the stabilizing effects of the stabilizer. Pilots being new to gyroplanes, especially those with fixed wing experience may not be aware of these physical limitations. When exceeding these limitations, be it by imitating ‘professionals’ or applying habits and control schemes from fixed wing aircraft, the gyroplane may enter an attitude where it is not recoverable any more. As the pedal control is rather sensitive and alignment is crucial in high-performing gyroplanes, pilots should develop a feeling for side slip and ‘automatized feet’ in order to maintain aerodynamic alignment and to compensate for power-induced yaw couplings by anticipation as a conditioned reflex. See also Pilot Information Letter (PIL) AG-PIL-2023-01-EN-Gyroplane-yaw-management-and-effects-on-controls.

A note to training facilities and flight instructors:

Due to their reduced directional stability, gyroplanes require active control to enter, stabilize and neutralize side slip. Most students perceive natural discomfort in side slip. Depending on the situation, students may erroneously make a wrong control input or freeze, especially when over-challenged, stressed, or surprised by the situation. In our opinion flight training should focus on the necessity of correct alignment, the training of recovery procedures, and the development of the right reflexes. Intentional side slip training as a normal procedure is considered to be critical as there is no instrument to indicate ‘safe’ boundaries. An experienced pilot may tell from an imminent change in control response when limits are approached. A student, however, may unknowingly or inadvertently overshoot the limits, especially when they are overly focussed on the touch-down zone and coming in too high.

Side slip may be performed as a part of the emergency training only, and within safe boundaries. The student must be briefed

- to use gentle pedal input for initiation and stabilization
- initiate side slip at or below 90 km/h (55mph, 48KIAS) and maintain air speed by using their perception of speed, respectively speed sensation (for want of a working air speed indication)
- not to rely on airspeed indication in side slip

- never to perform abrupt control stick input into the direction of motion (to chase a faulty speed indication)

It is highly advisable that the instructor remains light on the controls at all times.

Flying Low on Fuel Is Dangerous

Never intentionally allow the fuel level to become critically low. Although a gyroplane leaves much more options than a fixed wing aircraft and is easier to control during power-off than a helicopter, a forced landing into unknown terrain always poses unnecessary and unpredictable risk with danger to material, health, or life.

Do Not Push the Envelope and Remain Easy On the Controls

Avoid abrupt control inputs or accelerated manoeuvres, particularly at high speed. These produce high fatigue loads in the dynamic components and could cause a premature and catastrophic failure of a critical component.

Strobe Lights On – For Your Own and Other's Safety

Turn the strobe lights on (if installed) before starting the engine and leave it on until the rotor stops turning. The strobe lights are located near the propeller and provide a warning to ground personnel. Leaving them on in flight is also advisable since the gyroplane may be difficult for other aircraft to see.

Propellers and Rotors Can Be Extremely Dangerous

Never attempt to start the engine until the area around the propeller is completely clear of any persons or objects. Do not start the engine while standing beside the aircraft as you will easily be struck by the propeller in case of a brake failure or an operating error.

Be sure ground personnel or onlookers don't walk into the propeller or main rotor. Mind the spinning rotor and propeller when taxiing close to obstructions or persons. It is advisable to maintain at least one rotor diameter distance from obstructions or persons when taxiing with spinning rotor. A fast turning rotor is almost invisible, but contains enough energy to cause very serious injury.

Never let go of the control stick and make sure the rotor blades spin down in level/horizontal attitude until the rotor is at a complete stop. Wind or negligent behaviour on the control stick may cause the blades to flap dangerously low and hit control stops, stabilizer, or people.

Power Lines and Cables Are Deadly

Flying into wires, cables, and other objects is by far the number one cause of serious accidents in rotary wing aircraft. Pilots must constantly be on the alert for this very real hazard.

- Watch for the towers; you will not see the wires in time
- Fly directly over the towers when crossing power lines
- Allow for the smaller, usually invisible, grounding wire(s) which are well above the larger more visible wires
- Constantly scan the higher terrain on either side of your flight path for towers
- Always maintain at least 500 feet AGL except during take-off and landing.

Loss of Visibility can be Extremely Dangerous

Flying any aircraft in obscured visibility due to fog, snow, low ceiling, or even a dark night can be hazardous. Gyroplanes have less inherent stability and faster roll and pitch rates than most airplanes. Loss of the pilot's outside visual references can result in disorientation, wrong control inputs, and an uncontrolled crash. This type of situation is likely to occur when a pilot attempts to fly through a partially obscured area and realizes too late that that visibility is lost. Control of the gyroplane could be lost when attempting a turn to regain visibility without visual references.

You must take corrective action before visibility is lost! Remember, a precautionary landing will always be safer than a flight with impaired or no visibility.

Overconfidence Prevails in Accidents

A personal trait most often found in pilots having serious accidents is overconfidence. High-time fixed-wing pilots converting to gyroplanes and private owners are particularly susceptible. Airplane pilots feel confident and relaxed in the air, but have not yet developed the control feel, coordination, and sensitivity demanded by a gyroplane. Private owners must depend on self-discipline, which is sometimes forgotten. When flown properly and conservatively, gyroplanes are potentially the safest aircraft built. But especially gyroplanes also allow little tolerance when flown to their limits. Gyroplanes must always be flown defensively.

Flying Low over Water is Very Hazardous

Accidents repeatedly occur while manoeuvring low over water. Many pilots do not realize their loss of depth perception when flying over water. Flying over calm glassy water is particularly dangerous, but even choppy water, with its constantly varying surface, interferes with normal depth perception and may cause a pilot to misjudge his height above the water.

MAINTAIN SAFETY ALTITUDE AT ALL TIMES

Conversion Pilots Constitute High Risk When Flying Gyroplanes

There have been a number of serious accidents involving experienced pilots who have many hours in airplanes or helicopters but with only limited experience flying gyroplanes.

The ingrained reactions and habits of an experienced airplane pilot can be a serious disadvantage when flying a gyroplane. The airplane pilot may fly the gyroplane well when doing normal manoeuvres under ordinary conditions when there is time to think about the proper control response. But when required to react suddenly under unexpected circumstances, the pilot may revert to their airplane reactions and commit a serious error. Under those conditions, his hands and feet move purely by reaction without conscious thought. Those reactions may well be based on his greater experience, i.e., the reactions developed flying airplanes.

For example, in an airplane the reaction to an engine failure would be to immediately and considerably go forward with the stick or horn. In a gyroplane, application of excessive forward stick movement could result in a low-G situation or, if the engine failure occurred during initial climb, a reduction of rotor RPM combined with a high sink rate with the consequence of a hard landing or impact.

Airplane pilots may also underestimate pedal work. Especially in a gyroplane, pedal control is most critical as it has the highest rate response with the smallest static and dynamic damping effect of all other controls. On top of that, power-yaw coupling is much more predominant than in an airplane. Being used to the high directional stability of an airplane, a conversion pilot may neglect proper pedal work and, which is much worse, assume side slip limits at the pedal stop. Very much like helicopters, gyroplanes cannot be flown by control position or control force, but solely by resulting attitude. That means that the pilot together with their built-in senses and programmed reflexes represents a vital part in the active control feedback loop.

Helicopter pilots, on the other hand, may underestimate the characteristics of gyroplanes and the necessity for proper training. The simplicity of design may lead them to the assumption that gyroplanes are easy to fly throughout the envelope. Even helicopter pilots that do not 'look down' on gyroplanes and take it serious may confuse throttle control (push for power) with the control sense of a collective pitch (pull for power) in a stress situation.

To develop safe gyroplane reactions, conversion pilots must practice each procedure over and over again with a competent instructor until hands and feet will always make the right move without requiring conscious thought. AND, ABOVE ALL, PILOTS MUST NEVER ABRUPTLY PUSH THE CONTROL STICK FORWARD.

Beware of Demonstration or Initial Training Flights

A disproportionate number of accidents occur during demonstration or Initial training flights. The accidents occur because individuals other than the pilot are allowed to manipulate the controls without being properly prepared or indoctrinated.

If a student begins to lose control of the aircraft, an experienced flight instructor can easily regain control provided the student does not make any large or abrupt control movements. If, however, the student becomes momentarily confused and makes a sudden large control input in the wrong direction, even the most experienced instructor may not be able to recover control. Instructors are usually prepared to handle the situation where the student loses control and does nothing, but they are seldom prepared for the student who loses control and does the wrong thing.

Before allowing someone to touch the controls of the aircraft, they must be thoroughly indoctrinated concerning the sensitivity of the controls in a gyroplane. They must be firmly instructed to never make a large or sudden movement with the controls. And, the pilot-in-command must be prepared to instantly grip the controls should the student start to make a wrong move.

Training Off-Field Simulated Engine Failures

Pilots: Besides any legal aspects, never train off-field simulated engine failures on your own!

Instructors: Always check an area for wires or other obstructions before simulating engine failures. Consider go-around path and the suitability for an actual engine off touch-down. Cut the throttle smoothly and keep control of engine idle RPM to avoid actual engine stoppage.

INTENTIONALLY LEFT BLANK

APPENDIX

LIST OF APPENDICES

Operator Registration Form
Incident Reporting Form. Please downloaded this from the AutoGyro website as below.

Incident and Warranty Form - AutoGyro (auto-gyro.com)

INTENTIONALLY LEFT BLANK

Use this form to register as (new) operator / owner, in order to receive safety and service related information concerning your aircraft. The information is stored in a database and is only used within AutoGyro GmbH for the above purpose.

Without proper and timely registration, the operator will not receive vital information, which may lead to unsafe flight or an un-airworthy aircraft.

Return this form to:
AutoGyro GmbH
Dornierstraße 14
31137 Hildesheim or E-Mail to info@auto-gyro.com

Aircraft Type:	Serial Number (Werk-Nr.):	Registered at: (Airworthiness authority)
Registration / Call Sign: curr./new: previous:	Year of manufacture:	Engine Type:
Airframe S/N:	Rotor System S/N:	Engine S/N:
Airframe hours:	Rotor System hours:	Engine hours:

Previous Owner (if applicable) - please state name, full address, phone and E-Mail

Signature and Date

New/current Owner - please state name, full address, phone and E-Mail

E-Mail

Signature and Date

Below fields are used for AutoGyro internal processing – do not fill in!

Data entered onto database (by / when)	Acknowledgement sent (date) (by / when)	

www.auto-gyro.com

AutoGyro GmbH
Dornierstraße 14
31137 Hildesheim
Germany

Phone +49 5121 880 56–00
info@auto-gyro.com
www.auto-gyro.com